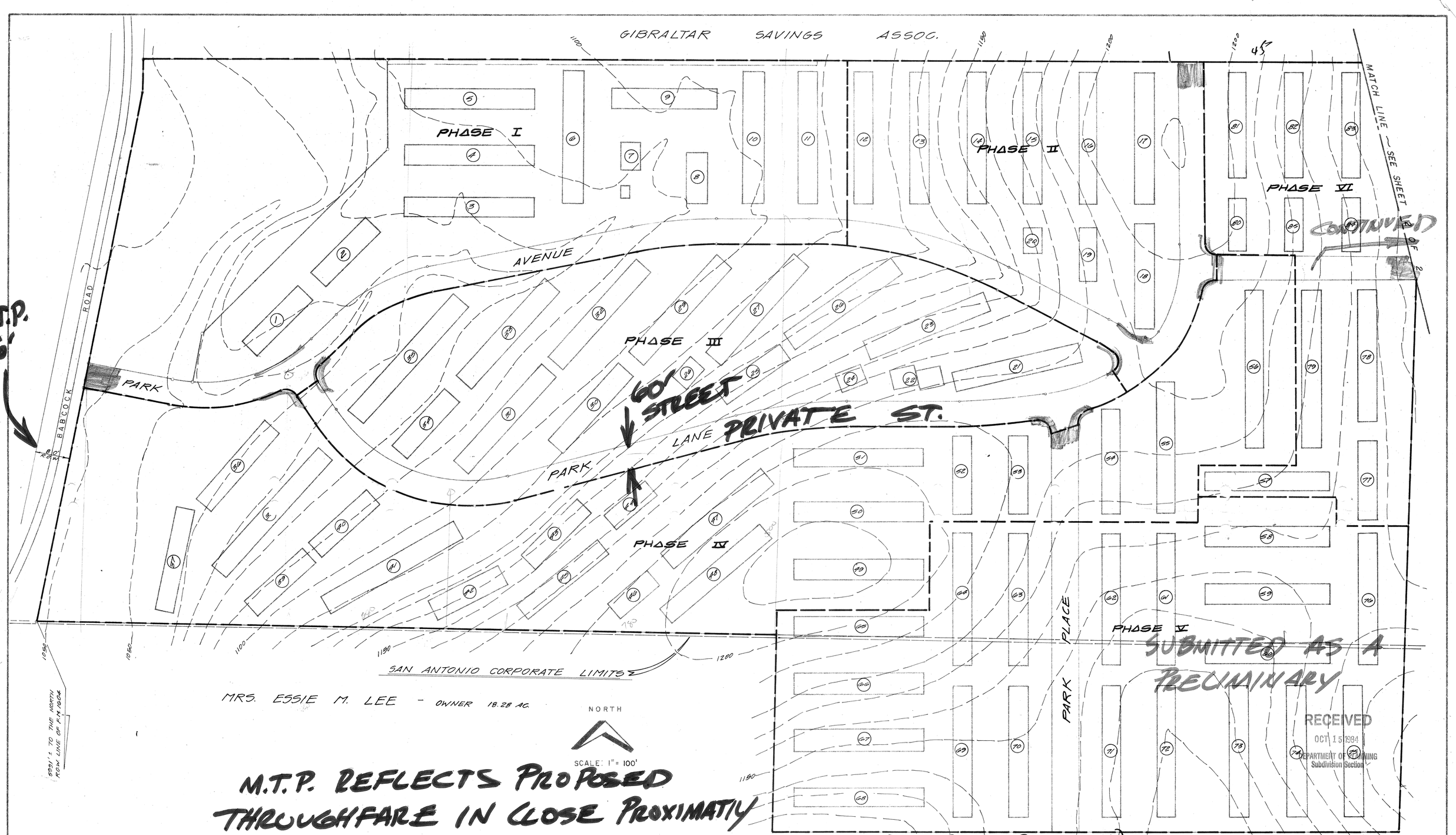

NOTES

1. PHASES TO BE CONSTRUCTED IN ORDER OF PHASE NO. @ 4 MONTHS INTERVALS.
2. WATER SERVICE WILL BE PROVIDED BY CITY WATER BOARD AND SANITARY SEWER SERVICE WILL BE PROVIDED BY THE CITY OF SAN ANTONIO

LEGEND

EXISTING COUNTOURS 822
(10' INTERVAL)
PHASES III
BUILDING NO. 3

TOTAL UNITS APPROX = 5,000
TOTAL ACREAGE = 167 AC.

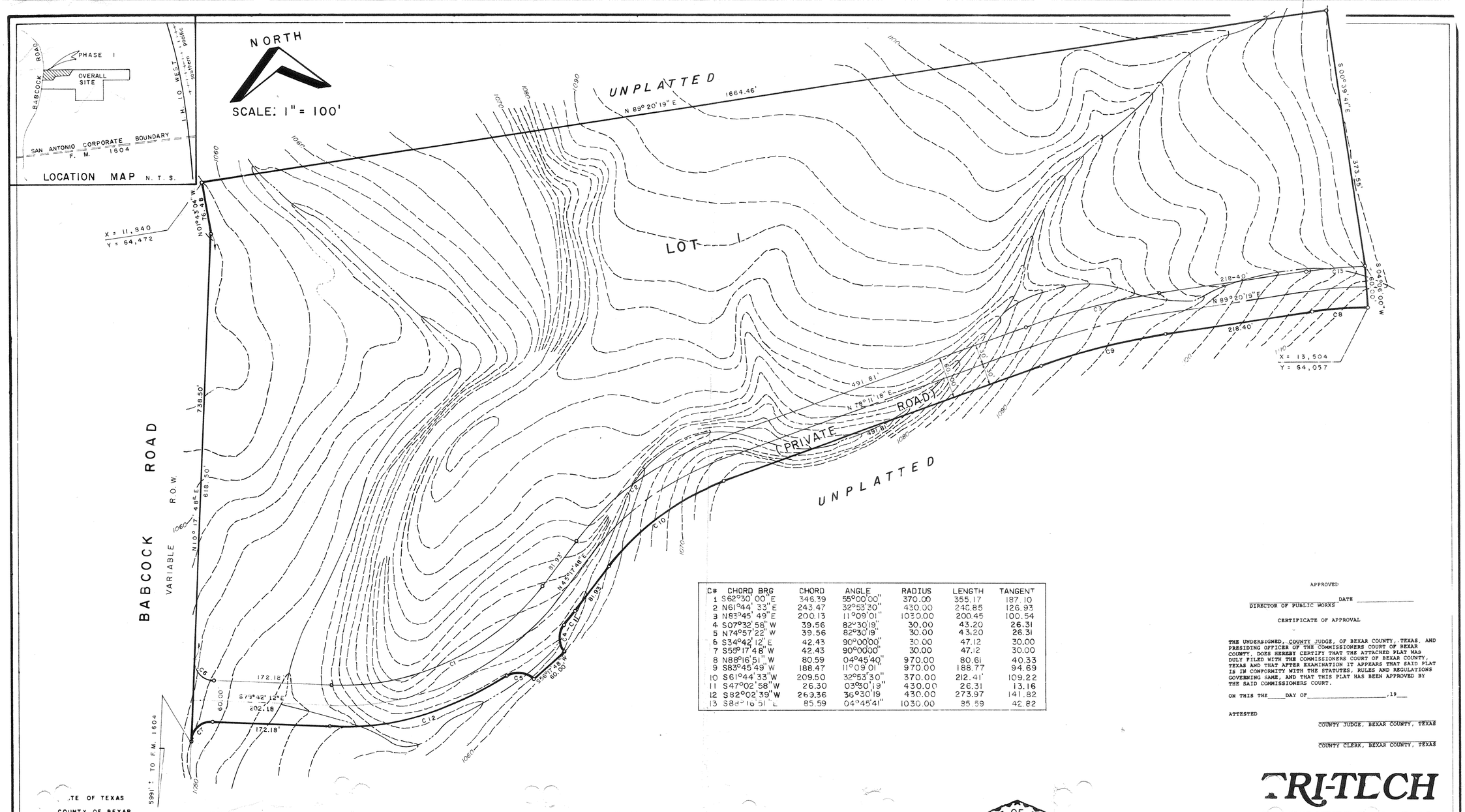

C#	CHORD BRG	CHORD	ANGLE	RADIUS	LENGTH	TANGENT
1	S62°30' 00"E	346.39	55°00'00"	370.00	355.17	187.10
2	N61°44' 33"E	243.47	32°53'30"	430.00	240.85	126.93
3	N83°45' 49"E	200.13	11°09'01"	1030.00	200.45	100.54
4	S07°32' 58"W	39.56	82°30'19"	30.00	43.20	26.31
5	N74°57' 22"W	39.56	82°30'19"	30.00	43.20	26.31
6	S34°42' 12"E	42.43	90°00'00"	30.00	47.12	30.00
7	S55°17' 48"W	42.43	90°00'00"	30.00	47.12	30.00
8	N88°16' 51"W	80.59	04°45'40"	970.00	80.61	40.33
9	S83°45' 49"W	188.47	11°09'01"	970.00	188.77	94.69
10	S61°44' 33"W	209.50	32°53'30"	370.00	212.41'	109.22
11	S47°02' 58"W	26.30	03°30'19"	430.00	26.31	13.16
12	S82°02' 39"W	269.36	36°30'19	430.00	273.97	141.82
13	S88°16' 51"E	85.59	04°45'41"	1030.00	85.59	42.82

APPROVED

DIRECTOR OF PUBLIC WORKS _____ DATE _____

CERTIFICATE OF APPROVAL

THE UNDERSIGNED, COUNTY JUDGE, OF BEXAR COUNTY, TEXAS, AND PRESIDING OFFICER OF THE COMMISSIONERS COURT OF BEXAR COUNTY, DOES HEREBY CERTIFY THAT THE ATTACHED PLAT WAS DULY FILED WITH THE COMMISSIONERS COURT OF BEXAR COUNTY, TEXAS AND THAT AFTER EXAMINATION IT APPEARS THAT SAID PLAT IS IN CONFORMITY WITH THE STATUTES, RULES AND REGULATIONS GOVERNING SAME, AND THAT THIS PLAT HAS BEEN APPROVED BY THE SAID COMMISSIONERS COURT.

ON THIS THE _____ DAY OF _____, 19___

ATTESTED

COUNTY JUDGE, BEXAR COUNTY, TEXAS

COUNTY CLERK, BEXAR COUNTY, TEXAS

STATE OF TEXAS

COUNTY OF BEXAR

I HEREBY CERTIFY THAT PROPER ENGINEERING CONSIDERATION HAS BEEN GIVEN THIS PLAT TO THE MATTERS OF STREETS, LOTS AND DRAINAGE LAYOUT, AND TO THE BEST OF MY KNOWLEDGE THIS PLAT CONFORMS TO ALL REQUIREMENTS OF THE SUBDIVISION ORDINANCE, EXCEPT FOR THOSE VARIANCES GRANTED BY THE PLANNING COMMISSION OF THE CITY.

REGISTERED PROFESSIONAL ENGINEER

SWORN TO AND SUBSCRIBED BEFORE ME THIS THE _____ DAY OF _____

A. D., 19_____

HUMBERTO ESTRADA, JR. NOTARY PUBLIC
BEXAR COUNTY, TEXAS

STATE OF TEXAS

COUNTY OF BEXAR

THE OWNER OF THE LAND SHOWN ON THIS PLAT IN PERSON OR THROUGH A DULY AUTHORIZED AGENT DEDICATES TO THE USE OF THE PUBLIC FOREVER ALL STREETS, ALLEYS, PARKS, WATER COURSES, DRAINS, EASEMENTS AND PUBLIC PLACES THEREON SHOWN FOR THE PURPOSE AND CONSIDERATION THEREIN EXPRESSED.

_____
Owner

_____
Duly Authorized Agent

STATE OF TEXAS

COUNTY OF BEXAR

BEFORE ME, THE UNDERSIGNED AUTHORITY ON THIS DAY PERSONALLY APPEARED

_____, KNOWN TO ME TO BE THE PERSON WHOSE NAME IS SUBSCRIBED TO THE FOREGOING INSTRUMENT, AND ACKNOWLEDGED TO ME THAT HE EXECUTED THE SAME FOR THE PURPOSES AND CONSIDERATIONS THEREIN EXPRESSED AND IN THE CAPACITY THEREIN STATED.

GIVEN UNDER MY HAND AND SEAL OF OFFICE THIS _____ DAY OF _____

A. D. 19_____

HUMBERTO ESTRADA Jr. NOTARY PUBLIC
BEXAR COUNTY, TEXAS

NOTARY PUBLIC COUNTY OF BEXAR, TEXAS

NOTARY PUBLIC COUNTY OF BEXAR, TEXAS

SUBDIVISION PLAT OF UNIVERSITY PARK ESTATES SUBDIVISION (PHASE I)

BEING LOT 1, CONTAINING 22.979 ACRES OUT OF A 137.0 ACRE TRACT OF LAND DESCRIBED IN DEED VOL. 6813/PG. 625 & OUT OF A 1,317 ACRES SERVTEX MATERIALS CO. TRACT OUT OF THE CHARLES H. SEIDENSCHNUR SUR. Nº 410, ABST. 122, C.B. 4725 & THE JASPER WOOLDRIDGE SUR. Nº 600, ABST. 1226, C.B. 4548, BEXAR COUNTY, TX.

The City of San Antonio as a part of its electric and gas system (City Public Service Board) is hereby dedicated the easements and rights-of-way for electric and gas distribution and service facilities in the areas designated on this plat as "Electric Easement", "Gas Easement", "Anchor Easement", "Service Easement", "Overhang Easement", "Utility Easement", and "Transformer Easement" for the purpose of installing, constructing, reconstructing, maintaining, removing, inspecting, patrolling, and erecting poles, hanging or burying wires, cables, conduits, pipelines or transformers, each with its necessary appurtenances; together with the right of ingress and egress over grantor's adjacent land, the right to relocate said facilities within said easement and right-of-way areas, and the right to remove from said lands all trees or parts thereof, or other obstructions which endanger or may interfere with the efficiency of said lines or appurtenances thereto. It is agreed and understood that no buildings, concrete slabs, or walls will be placed within said easement areas.

Any CPS monetary loss resulting from modifications required of CPS equipment, located within said easement, due to gradechanges or ground elevation alterations shall be charged to the person or persons deemed responsible for said grade changes or ground elevation alteration.

THIS PLAT OF _____ HAS BEEN SUBMITTED TO AND CONSIDERED BY THE PLANNING COMMISSION OF THE CITY OF SAN ANTONIO, TEXAS AND IS HEREBY APPROVED BY SUCH COMMISSION.

DATED THIS _____ DAY OF _____ A. D. 19_____

BY _____
CHAIRMAN

BY: _____
SECRETARY

STATE OF TEXAS
BERTULDO R. DUANO
3727
REGISTERED PUBLIC SURVEYOR

NOTARY PUBLIC COUNTY OF BEXAR, TEXAS

STATE OF TEXAS

COUNTY OF BEXAR

I HEREBY CERTIFY THAT THIS PLAT IS TRUE AND CORRECT AND WAS PREPARED FROM AN ACTUAL SURVEY OF THE PROPERTY MADE UNDER MY SUPERVISION ON THE GROUND.

REGISTERED PROFESSIONAL ENGINEER
OR
REGISTERED PUBLIC SURVEYOR

SWORN TO AND SUBSCRIBED BEFORE ME THIS THE _____ DAY OF _____

A. D., 19_____.

HUMBERTO ESTRADA, JR. NOTARY PUBLIC
BEXAR COUNTY, TEXAS

STATE OF TEXAS

COUNTY OF BEXAR

I, _____ COUNTY CLERK OF SAID COUNTY, DO HEREBY CERTIFY

THAT THIS PLAT WAS FILED FOR RECORD IN MY OFFICE ON THE _____ DAY OF _____

A. D _____ AT _____ M AND DULY RECORDED THE _____ DAY OF _____

A. D _____ AT _____ M IN THE RECORDS OF _____

OF SAID COUNTY, IN BOOK VOLUME _____ ON PAGE _____

IN TESTIMONY WHEREOF, WITNESS MY HAND AND OFFICIAL SEAL OF OFFICE THIS _____

DAY OF _____ A. D _____

COUNTY CLERK, BEXAR COUNTY, TEXAS

BY: _____, DEPUTY

TRI-TECH ENGINEERING INC.
ENGINEERS ● PLANNERS ● SURVEYORS
5400 CALLAGHAN
SAN ANTONIO, TEXAS 78228-1798
(512) 436-1376

#134

JOB ORDER NO 8405 - 001

GIBRALTAR SAVINGS ASSOC.

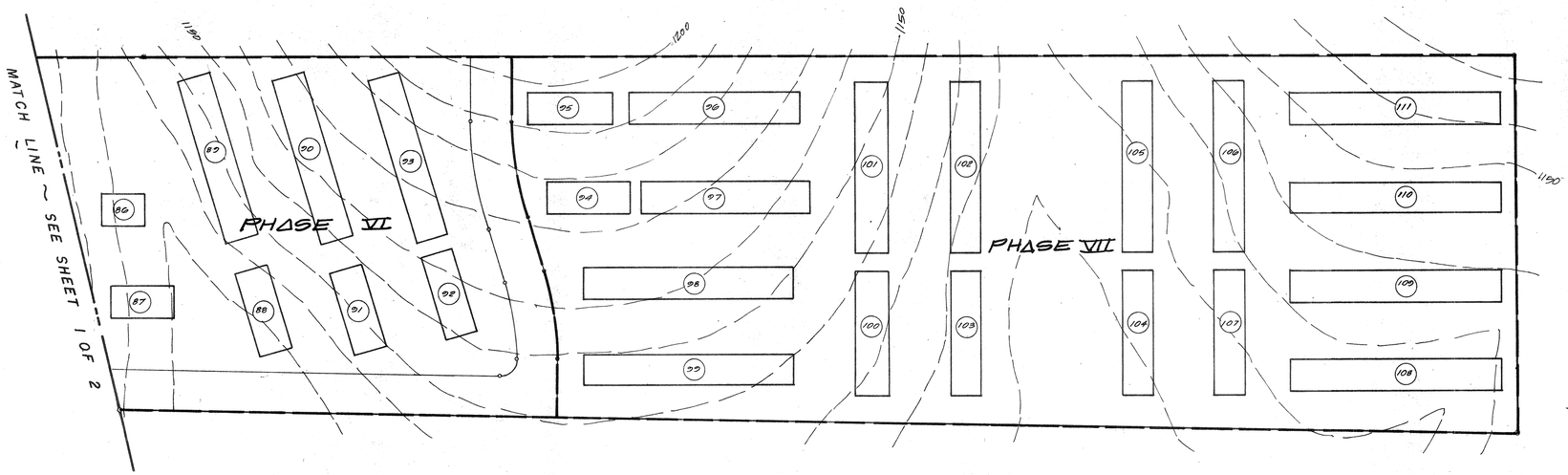

OWNER UNKNOWN

NORTH

SCALE: 1" = 100'

134

P.O.A.P.D.
FOR
UNIVERSITY PARK ESTATES

R.D.D. DESIGN	TRI-TECH ENGINEERING INC.	7-20-84 DATE
F.H. DRAWN	ENGINEERS • PLANNERS • SURVEYORS	8405-001 JOB NO.
H.S. CHECKED	5400 CALLAGHAN ROAD SAN ANTONIO, TEXAS 78228 : 436-1376	SHEET 2 OF 2

GIBRALTAR SAVINGS ASSOC.

PHASE I

PHASE II

PHASE III

PHASE IV

PHASE V

PHASE VI

AVENUE

PARK

PARK LANE

PARK PLACE

BABCOCK ROAD

80' R.O.W.

MATCH LINE — SEE SHEET 2 OF 2

SAN ANTONIO CORPORATE LIMITS

MRS. ESSIE M. LEE - OWNER 18.28 AC.

5331' ± TO THE NORTH ROW LINE OF F.M. 1604

NORTH

SCALE: 1" = 100'

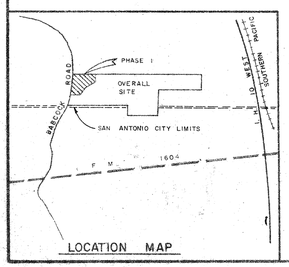

LOCATION MAP

NOTES

1. PHASES TO BE CONSTRUCTED IN ORDER OF PHASE NO. @ 4 MONTHS INTERVALS.
2. WATER SERVICE WILL BE PROVIDED BY CITY WATER BOARD AND SANITARY SEWER SERVICE WILL BE PROVIDED BY THE CITY OF SAN ANTONIO

LEGEND

EXISTING COUNTOURS (10' INTERVAL) ---822---

PHASES III

BUILDING NO. (3)

TOTAL UNITS APPROX. = 5000

TOTAL ACREAGE = 167 AC.

PRELIMINARY OVERALL DEVELOPMENT PLAN

FOR

UNIVERSITY PARK ESTATES APARTMENT COMPLEX

CLIENT : JEFFERSON TRUST

134

P. O. A. D. P
FOR
UNIVERSITY PARK ESTATES

R. D. D. DESIGN	TRI-TECH ENGINEERING INC. ENGINEERS • PLANNERS • SURVEYORS 5400 CALLAGHAN ROAD SAN ANTONIO, TEXAS 78228 · 436-1376	7-20-84 DATE
F. H. DRAWN		8405-001 JOB NO.
H. S. CHECKED		SHEET 1 OF 2

RECEIVED
OCT 15 1984
DEPARTMENT OF PLANNING
Subdivision Section

GIBRALTAR SAVINGS ASSOC.

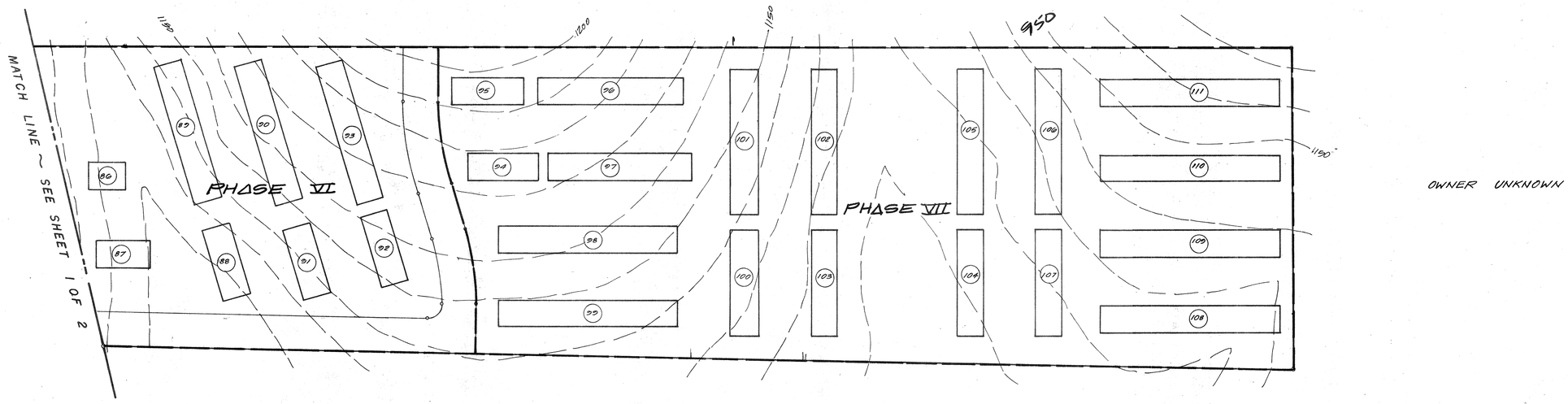

OWNER UNKNOWN

NORTH

SCALE: 1" = 100'

134	P.O.A.P.D. FOR UNIVERSITY PARK ESTATES	
R.D.D. DESIGN	TRI-TECH ENGINEERING INC. ENGINEERS • PLANNERS • SURVEYORS 5400 CALLAGHAN ROAD SAN ANTONIO, TEXAS 78228 : 436-1376	7-20-84 DATE
F.H. DRAWN		8405-001 JOB NO.
H.S. CHECKED		SHEET 2 OF 2

INFORMATION SHEET FOR
PRELIMINARY OVERALL AREA DEVELOPMENT PLAN
(P.O.A.D.P.)

FILE NO. 84-11-64-80 (To be assigned by the Planning Dept.)

UNIVERSITY PARK EST. — P.O.A.D.P. NAME

JEFFERSON TRUST — NAME OF DEVELOPER/SUBDIVIDER — ADDRESS — PHONE NO.

MR. ROBERT DIAZ DELEON
TRI-TECH ENG. INC. — NAME OF CONSULTANT — 5400 CALLAGHAN RD. — ADDRESS — 436-1376 — PHONE NO.

GENERAL LOCATION OF SITE ALONG THE EAST R.O.W. LINE OF BABCOCK RD. NORTH OF ITS INTERSECTION WITH F.M. 1604

EXISTING ZONING (If Applicable) O.C.L.

PROPOSED WATER SERVICE
- (X) City Water Board
- ( ) Other District _____ Name
- ( ) Water Wells

PROPOSED LAND USE
- ( ) Single Family
- ( ) Duplex
- (X) Multi-Family
- ( ) Business
- ( ) Industrial

PROPOSED SEWER SERVICE
- (X) City of San Antonio
- ( ) Other System _____ Name
- ( ) Septic Tank(s)

DATE FILED OCT. 15, 1984

REVISIONS FILED: _____ (if applicable)

DUE DATE OF RESPONSE Nov. 12, 1984 (Within 20 working days of receipt)

DATE OF RESPONSE _____ (Within 15 working days of receipt)

~~APRIL~~ MAY 1986 (Date of expiration of plan, if no plats are received within 18 months of the plan filing)

REVIEWED BY STAFF ON _____

COMMENTS: _____

NEEDED INFORMATION:

INFORMATION REQUESTED: The POADP as an overview of the developer's projected land use shall include, at least the following information:

- ✓ (a) perimeter property lines;
- ✓ (b) name of the plan and the subdivisions;
- ✓ (c) scale;
- → (d) proposed land use(s) by location and type;
- (e) existing and proposed circulation system of collector and arterial streets and their relationship to any adjacent major thoroughfares and any proposed alternative pedestrian circulation systems; sidewalks, lanes, paths, etc.);
- ✓ (f) the proposed source and type of sewage disposal and water supply;
- ✓ (g) contour lines at no greater than ten (10) foot intervals;
- (h) projected sequence of phasing;
- O.C.L. (i) existing and/or proposed zoning classification(s);
- → (j) known ownership and proposed development of adjacent undeveloped land; and
- → (k) existing adjacent streets or development which impact upon access decisions within the proposed POADP.

DISTRIBUTION: TRAFFIC 10-15-84 TRANSPORTATION STUDY OFFICE 10-15-84

COMMENTS: COMMITTEE REVIEW 10-15-84. Committee felt there was a need to meet with Robert to discuss north-south connector if possible thoroughfare needs across property. Before we meet all will contact surrounding property owners to determine street needs in the area. Additional staff opinion is that expected development (Apt) will mandate a thoroughfare in this area. 10-19-84 Called Robert out of town, secretary not in office. They will return call.

CITY OF SAN ANTONIO

P. O. BOX 9066
SAN ANTONIO, TEXAS 78285

November 5, 1984

Applicant: Tri Tech Eng. Inc.
Mr. Robert Diaz DeLeon
Address: 5400 Callaghan Road
San Antonio, Texas 78228

Re: University Park Est.
XX Preliminary Plan
☐ P.O.A.D.P.

File #: 84-11-64-80

The above has been reviewed by Planning and Traffic staff and it has been determined that it:

( ) is in general compliance with the Subdivision Regulations

( ) lacks compliance with the Subdivision Regulations regarding:

( ) Street layout
( ) Relation to adjoining street system
( ) Stub streets
( ) Street jogs or intersections
( ) Dead-end streets
( ) Cul-de-sac streets in excess of 500'
( ) Low density lots fronting onto major thoroughfares
( ) 24' alley(s)
( ) _____

( ) See annotations/comments on attached copy of your plan.

(X) Comments: See attachment.

Please note that these are staff comments and not Planning Commission comments. This action does not establish any commitment for the provision of utilities or services of any type now or in the future by the City of San Antonio. Additionally, this action does not confer any vested rights to plat under the existing Subdivision Regulations. Any platting will have to comply with the Subdivision Regulations in force at the time of platting.

MCONeal

Michael C. O'Neal
Chief, Current Planning

sm

"AN EQUAL OPPORTUNITY EMPLOYER"

As discussed with Mr. Sing of your office, review is pending the additional information the staff has requested. The information requested is relative to current ownership in the immediate area of your property. Need of this information is in an effort to schedule a meeting with respective property owners to discuss thoroughfare needs. Please submit the requested information to Al Eisenmenger of the Transportation Division of the Planning Department.

CITY OF SAN ANTONIO

P. O. BOX 9066
SAN ANTONIO TEXAS 78285

Tri-Tech Eng. Inc

Applicant: Mr. Robert Diaz De Leon
Address: 5400 Callaghan Rd.
San Antonio Texas
78228

☒ Preliminary Plan
☐ P.O.A.D.P.

Re: University Park East

File #: 84-11-64-80

The above has been reviewed by Planning and Traffic staff and it has been determined that it:

( ) is in general compliance with the Subdivision Regulations

( ) lacks compliance with the Subdivision Regulations regarding:

( ) Street layout
( ) Relation to adjoining street system
( ) Stub streets
( ) Street jogs or intersections
( ) Dead-end streets
( ) Cul-de-sac streets in excess of 500'
( ) Low density lots fronting onto major thoroughfares
( ) 24' alley(s)
( ) _____

( ) See annotations/comments on attached copy of your plan.

(X) Comments: As discussed with Mr. Sang of your office, review is pending the additional information the staff has requested. The info requested is relative to current ownership in the immediate area of your property. Need of this info. is in an effort to schedule a meeting with respective property owners to discuss thoroughfare needs. Please submit the requested info to Al Eisenmenger of the Transportation Division of the Planning Dept.

Please note that these are staff comments and not Planning Commission comments. This action does not establish any commitment for the provision of utilities or services of any type now or in the future by the City of San Antonio. Additionally, this action does not confer any vested rights to plat under the existing Subdivision Regulations. Any platting will have to comply with the Subdivision Regulations in force at the time of platting.

(I need to check with Al, before we mail this one)

Michael C. O'Neal
Chief, Current Planning

sm

"AN EQUAL OPPORTUNITY EMPLOYER"

CITY OF SAN ANTONIO

Intradepartmen: Correspondence Sheet

TO: File

FROM:

COPIES TO:

SUBJECT: Meeting with Robert Diaz De Leon &

Date Oct. 26, 1984

Oct 26, 1984

The staff met with Robert Diaz De Leon & Mr. Sing (engineer). Discussion involved the possible north-south street connection & major thoroughfare needs across property (86' facilities). Staff is of the opinion that the expected volumes of traffic generated by 5000 units warrants the street. Robert indicated that although streets are designated as private, all internal streets will be constructed to city standards. In order to determine the street alignments, there was a concensus that we would bring all adjacent property owners together. Worth Tract, Balser/Wender and the P.O.A.D.P. applicant. We will set up meeting for Tuesday - Nov. 1, 1984.

To clarify Roberts' statement that because of the situation a P.O.A.D.P was not necessary. I appreciate the comment that Robert & I discussed. This matter and based on the situation (no public streets) a P.O.A.D.P was not needed. However because of the situation I told Robert we would be glad to review & comment as a courtesy.

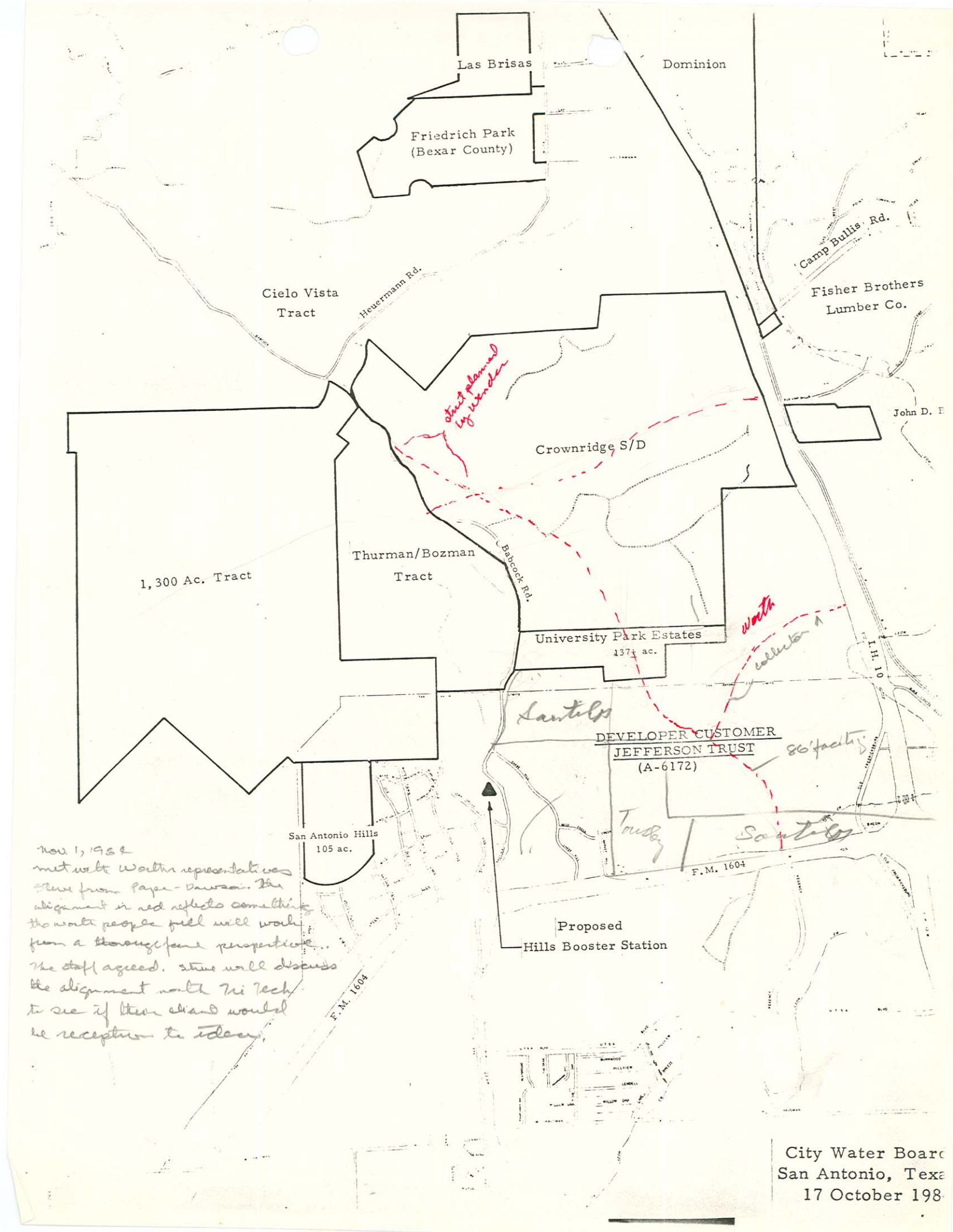

Nov. 1, 1982
met with Worth representatives
Steve from Pape-Dawson. The
alignment in red reflects something
the north people feel will work
from a thoroughfare perspective..
The staff agreed. Steve will discuss
the alignment with Mr Tech
to see if there would
be reception to idea.

City Water Board
San Antonio, Texa
17 October 198

TRI-TECH ENGINEERING, INC.

5400 CALLAGHAN ROAD • SAN ANTONIO, TEXAS 78228-1798 • (512) 436-1376

September 28, 1984

Director of ~~Engineering~~ Mains and Services
City Water Board
City of San Antonio, Texas

Re: University Park Estates

Attn: Mr. ~~Val T. Ruiz~~ Whyme Bitzkie

Dear Mr. ~~Ruiz,~~ Bitzkie

On behalf of our client, Jefferson Trust, 2900 Mossrock Dr.,Suite 160, San Antonio, Texas 78230, who intends to develop 137± acres of land into 5,000 family units, we would request City Water Board to provide service to the development.

The existing and proposed water distribution system is shown on the Master Water Plan, which has been submitted earlier.

Should you have any questions, please contact us.

Very truly yours,
TRI-TECH ENGINEERING,INC.

Hardit Singh, P.E.

HS/lk

RECEIVED
OCT 3 1984
MAINS-SERVICES
DEPT.
CITY WATER BOARD

TRI-TECH ENGINEERING, INC.
5400 Callaghan Road
SAN ANTONIO, TEXAS 78228

(512) 436-1376

LETTER OF TRANSMITTAL

DATE 9-20-84 JOB NO.

ATTENTION EDDIE GUZMAN

RE: UNIVERSITY PARK ESTATES

TO PLANNING DEPT.

WE ARE SENDING YOU ☐ Attached ☐ Under separate cover via _____ the following items:

☐ Shop drawings ☐ Prints ☐ Plans ☐ Samples ☐ Specifications

☐ Copy of letter ☐ Change order ☐ _____

COPIES	DATE	NO.	DESCRIPTION
4			P.O.A.D.P.
4			SUBDIVISION PLAT

RECEIVED
1984 SEP 20 PM 4:01
DEPT. OF PLANNING
CURRENT PLANNING
SECTION

THESE ARE TRANSMITTED as checked below:

☑ For approval ☐ Approved as submitted ☐ Resubmit _____ copies for approval

☐ For your use ☐ Approved as noted ☐ Submit _____ copies for distribution

☐ As requested ☐ Returned for corrections ☐ Return _____ corrected prints

☑ For review and comment ☐ _____

☐ FOR BIDS DUE _____ 19 _____ ☐ PRINTS RETURNED AFTER LOAN TO US

REMARKS 9-25-84
Spoke to Mr Singh regarding plan.
He said he would discuss proposal
with his client & get back with staff

Also Spoke to Robert Day De Leon & discussed
proposal. Based on the info given I advised
that plan was not a POA DP. but the staff
would be glad to review it & give recommendation/
comments.

COPY TO William C. Vann Jr.

SIGNED: Julia Pusson

PRODUCT 240-2 NEBS Inc., Groton, Mass. 01471.

If enclosures are not as noted, kindly notify us at once.

TRI-TECH ENGINEERING, INC.
5400 Callaghan Road
SAN ANTONIO, TEXAS 78228

(512) 436-1376

LETTER OF TRANSMITTAL

DATE 10-15-84	JOB NO.
ATTENTION EDDIE GUZMAN	
RE: UNIVERSITY PARK ESTATES	

TO PLANNING COMMISSION

WE ARE SENDING YOU ☐ Attached ☐ Under separate cover via _____ the following items:

☐ Shop drawings ☐ Prints ☐ Plans ☐ Samples ☐ Specifications

☐ Copy of letter ☐ Change order ☐ _____

COPIES	DATE	NO.	DESCRIPTION
5			REVISED P.O.A.D.P.

THESE ARE TRANSMITTED as checked below:

☑ For approval ☐ Approved as submitted ☐ Resubmit _____ copies for approval

☐ For your use ☐ Approved as noted ☐ Submit _____ copies for distribution

☐ As requested ☐ Returned for corrections ☐ Return _____ corrected prints

☐ For review and comment ☐ _____

☐ FOR BIDS DUE _____ 19 _____ ☐ PRINTS RETURNED AFTER LOAN TO US

REMARKS _____

COPY TO E. Guzman

SIGNED: Julia Pinson

If enclosures are not as noted, kindly notify us at once.

PRODUCT 240-2 NEBS Inc., Groton, Mass. 01471.