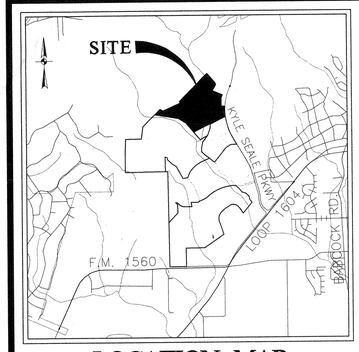

LOCATION MAP

N.T.S.

BEXAR COUNTY CLEAR VISION STATEMENT:

CLEAR VISION CALCULATIONS WILL BE BASED ON AASHTO CASE NO III B&C FOR TURNING MANUEVERS ON TO MAJOR HIGHWAYS. EASEMENTS TO BE SHOWN ON INDIVIDUAL PLATS WHEN SUBMITTED.

NAME & ADDRESS OF OWNERS WITHIN 200'

1. LAREDO SONOMA RANCH, LTD
   15102 JONES MALTSBERGER, STE 101
   SAN ANTONIO, TX 75247
2. LAREDO SONOMA RANCH, LTD
   15102 JONES MALTSBERGER, STE 101
   SAN ANTONIO, TX 75247

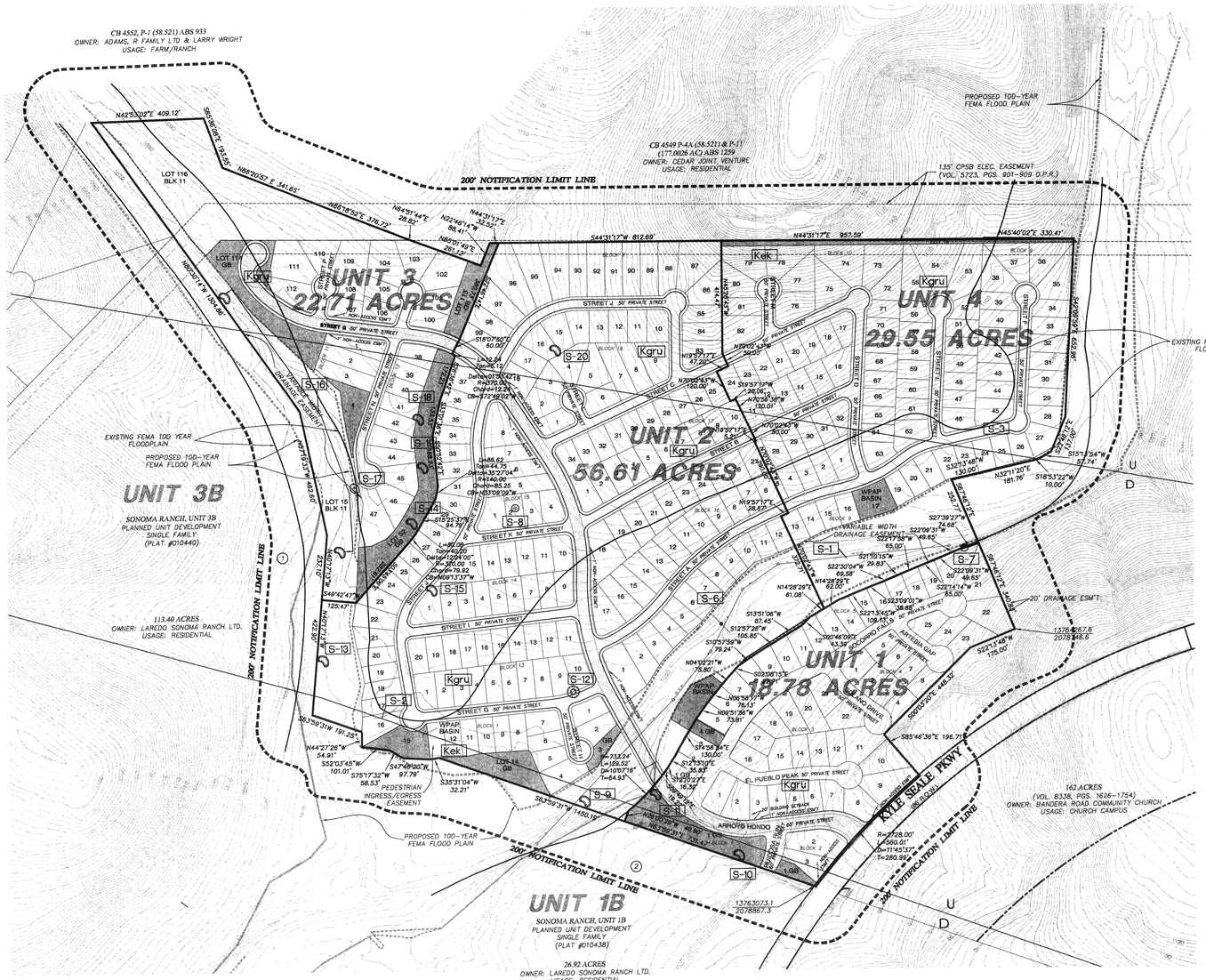

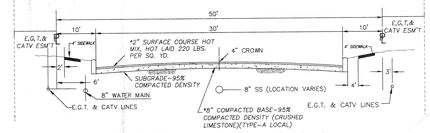

STREET CROSS-SECTION (50' R.O.W.)

N.T.S.

* PAVEMENT DESIGN THICKNESS BASED ON GEOTECHNICAL REPORT BY INTERGRATED TESTING AND ENGINEERING COMPANY

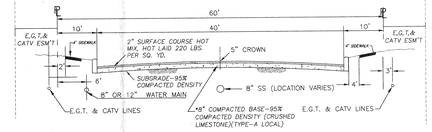

STREET CROSS-SECTION (60' R.O.W.)

N.T.S.

* PAVEMENT DESIGN THICKNESS BASED ON GEOTECHNICAL REPORT BY INTERGRATED TESTING AND ENGINEERING COMPANY

SCALE: 1" = 200'

200' 0' 100' 200' 400'

LEGEND

- GREENBELT/PRIVATE COMMON AREA
- (1) PROPERTY OWNER KEY (SEE SUMMARY THIS SHEET)
- LOCAL TYPE "B" STREET 60' R.O.W., 40' PAVEMENT AND 2 ~ 10' PARKWAYS

NOTES:

1) THE BEARINGS ARE BASED ON A 753.3 ACRE TRACT OF LAND DESCRIBED IN INSTRUMENT RECORDED IN VOLUME 8338, PAGES 1626-1754 OF THE OFFICIAL PUBLIC RECORDS OF REAL PROPERTY OF BEXAR COUNTY, TEXAS.

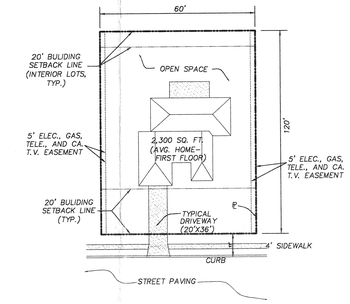

TYPICAL LOT
(60' X 120')
(NOT TO SCALE)

SENSITIVE GEOLOGIC FEATURES:

THE FOLLOWING IS A GEOLOGIC FEATURE WHICH WAS IDENTIFIED DURING A GEOLOGIC ASSESSMENT PERFORMED BY PAPE-DAWSON ENGINEERS ON MAY 30, 2002 AND WAS DETERMINED TO BE "SENSITIVE":

- S-1 — FEATURE S-1 IS AN EXISTING SANITARY LINE
- S-2, S-3 — FEATURE S-2 AND S-3 ARE FAULT ZONES IDENTIFIED THROUGH FIELD INVESTIGATION AND AERIAL PHOTOGRAPH REVIEW
- S-6 — FEATURE S-6 IS A FRACTURED ROCK ZONE THAT DOES NOT HAVE A DOMINANT TREND
- S-8 — FEATURE S-8 IS A WATER WELL OPERATED BY A WINDMILL
- S-9, S-10, S-11, S-12, S-13, S-14 — FEATURE S-9 THROUGH S-11 ARE CLOSED DEPRESSIONS CREATED BY STREAM SCOUR. FEATURE S-12 IS A SINKHOLE THAT IS FILLED WITH LEAF LITTER, SOIL, AND SOME LOOSE ROCK. THERE IS NO EXPOSED RIMROCK. A LOW SOIL BERM IS PRESENT ALONG A PORTION OF THE SINKHOLE RIM, WHICH SUGGESTS A POSSIBLE MANMADE ORIGIN. MINOR HAND EXCAVATION REVEALED CLAYEY SOIL WITH COBBLES. FEATURE S-13 NAD S-14 ARE CLOSED DEPRESSIONS CREATED BY STREAM SCOUR
- S-15 — FEATURE S-15 IS A MAN MADE CLOSED DEPRESSION CREATED BY QUARRYING ROCK
- S-16 — FEATURE S-16 IS A ZONE OF CLOSED DEPRESSIONS CREATED BY STREAM SCOUR
- S-17 — FEATURE S-17 APPEARS TO BE A NARROW PALEOSPRING CAVE
- S-18, S-19 — FEATURE S-18 AND S-19 ARE CLOSED DEPRESSIONS CREATED BY STREAM SCOUR

SANITARY SEWER:	SAN ANTONIO WATER SYSTEM
WATER:	SAN ANTONIO WATER SYSTEM
GAS AND ELECTRIC:	CITY PUBLIC SERVICE
TELEPHONE:	SOUTHWESTERN BELL TELEPHONE COMPANY

ENGINEER: PAPE-DAWSON ENGINEERS
555 E. RAMSEY
SAN ANTONIO, TX 78216
OFFICE: (210) 375-9000
FAX: (210) 375-9010

DEVELOPER: LAREDO SONOMA RANCH, LTD.
15102 JONES MALTSBERGER, SUITE #101
SAN ANTONIO, TEXAS 78247

PHASE/ UNIT	ESTIMATED COMPLETION DATE	LAND USE	GROSS AREA (Ac.)	No. OF BUILDABLE LOTS	DENSITY (LOTS/Ac.)
1	AUG. 2002	SINGLE FAMILY RESIDENTIAL	18.78	55	2.9
2	JUNE 2003	SINGLE FAMILY RESIDENTIAL	56.61	165	2.9
3	DEC. 2003	SINGLE FAMILY RESIDENTIAL	22.71	27	1.2
4	JUNE 2004	SINGLE FAMILY RESIDENTIAL	29.55	91	3.1
		TOTALS/AVERAGE	127.65	338	2.6

NOTE:
1. ALL INTERNAL STREETS WITHIN THE P.O.A.D.P. LIMITS ARE LOCAL TYPE "A" W/A 50' R.O.W, 30' PAVEMENT AND 2-10' PARKWAYS, EXCEPT AS NOTED.
2. PROPERTY IS OUTSIDE THE CITY LIMITS OF THE CITY OF SAN ANTONIO.
3. PROPERTY IS WITHIN THE EDWARDS AQUIFER RECHARGE ZONE.
4. PROPERTY IS LOCATED WITHIN KYLE SEALE RANCH 1,325 ACRE TRACT DEVELOPMENT RIGHTS PERMIT AREA, PERMIT NO. 238.
5. THE BEARINGS FOR THIS SURVEY ARE BASED ON THE DEED OF THE 735.3 ACRE TRACT AS RECORDED IN VOLUME 8338, PAGES 1626-1754 O.P.R.

DEVELOPMENT PHASING:

UNIT 1 = CONSTRUCTION WILL BEGIN BY OCTOBER, 2002.
UNIT 2 = JUNE 2003

PUD PLAN NO.: _____
APPROVED BY THE PLANNING COMMISION OF THE CITY OF SAN ANTONIO

CHAIRMAN: _____ **DATE:** _____

SECRETARY: _____ **DATE:** _____

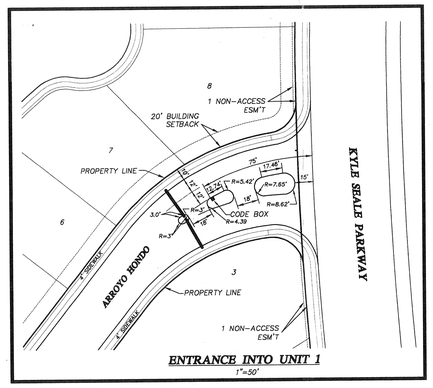

ENTRANCE INTO UNIT 1
1"=50'

CEDAR CREEK SOUTH UNIT I, II, III, & IV OPEN AREA CALCULATIONS (IN ACRES)					
Description	UNIT I	UNIT II	UNIT III	UNIT IV	TOTAL
No. of Lots	55	165	25	91	338
Gross Area	18.78	56.61	22.71	29.55	127.65
Building Coverage	2.90	8.71	1.43	4.80	17.85
Other Coverages					
a. Streets	2.91	6.88	1.78	2.9	14.47
b. Sidewalks	0.53	1.50	0.35	0.69	3.07
c. Driveway	0.91	2.73	0.45	1.50	5.59
d. 50% Drain	0.07	0.41	0.00	0.24	0.72
Total Coverages	7.38	20.22	4.00	10.14	41.69
Open Spaces					
a. Greenbelts/buffers	1.50	8.03	12.82	3.68	26.03
b. Residential Lots	8.94	25.90	5.36	14.46	54.66
c. 50% Drain	0.07	0.41	0.00	0.24	0.72
d. Parkway	0.95	2.05	0.40	1.02	4.42
Total Open Space	11.46	36.39	18.58	19.40	85.82

$$\text{Open Space Ratio} = \frac{85.82}{127.65} \times 100 = 67.23\%$$

PUD PLAN NOTES:

1. DRAINS FROM STREETS ARE PRIVATELY MAINTAINED BY THE HOMEOWNERS ASSOCIATION.
2. STREETS ARE TYPE "A" 50' R.O.W. UNLESS OTHERWISE INDICATED AND ARE PRIVATE.
3. SANITARY SEWER SYSTEM TO BE DEDICATED TO THE SAN ANTONIO WATER SYSTEM.
4. WATER SYSTEM TO BE DEDICATED TO THE SAN ANTONIO WATER SYSTEM.
5. ALL CORNER LOTS SHALL COMPLY WITH THE CLEAR VISION AREA AS REQUIRED BY SEC 35-3339.
6. PROPERTY IS LOCATED OVER THE EDWARDS AQUIFER RECHARGE ZONE.
7. PROPERTY IS OUTSIDE THE CITY LIMITS AND LOCATED WITHIN THE ETJ THEREFORE IT IS NOT SUBJECT TO ZONING RESTRICTIONS.
8. ALL PROPERTY SHOWN AS GREENBELT/COMMON AREA WILL BE PASSIVE OPEN SPACE.

ENVIRONMENTAL RECOMMENDATIONS:

1. THAT THE CAVES REMAIN OPEN WITH A BUFFER ZONE DESIGNED PER THE CRITERIA CONTAINED IN SEC 34-920(b) OF ORDINANCE NO. 81491 OR OTHER APPROVED CRITERIA. THE CALCULATIONS FOR DETERMINING THE BUFFER ZONE AROUND THE CAVE SHALL BE SUBMITTED TO AND APPROVED BY SAWS PRIOR TO THE COMMENCEMENT OF CONSTRUCTION. THE CAVE MAY BE BUFFERED BY HAVING THE CAVE SURROUNDED BY A GREENBELT AND/OR CONSERVATION EASEMENT AS PART OF THE DRAINAGE EASEMENT. THE OPENING OF THE CAVE SHALL BE GRATED TO PREVENT UNAUTHORIZED ENTRANCE AND TO PROVIDE A DEGREE OF SAFETY;
2. PRIOR TO THE RELEASE OF ANY BUILDING PERMITS FOR ADDITIONAL DEVELOPMENTS, THE FOLLOWING SHALL BE SUBMITTED TO THE AQUIFER STUDIES DIVISION OF THE SAN ANTONIO WATER SYSTEM;
   A. A WATER POLLUTION ABATEMENT PLAN SHALL BE SUBMITTED FOR EACH PARTICULAR DEVELOPMENT/USE WITHIN THE AREA BEING CONSIDERED.
   B. A SET OF SITE SPECIFIC PLANS WHICH MUST HAVE AS SIGNED ENGINEERS SEAL FROM THE STATE OF TEXAS;
   C. A LETTER FROM THE TEXAS NATURAL RESOURCE CONSERVATION COMMISSION APPROVING EACH WATER POLLUTION
   D. A COPY OF THE APPROVED WATER POLLUTION ABATEMENT PLAN.
3. ANY AREAS PLATTED AS DRAINAGE RIGHT-OF-WAYS BE KEPT IN A VEGETATED CONDITION.
4. ONLY A MINIMAL AMOUNT OF PESTICIDES, HERBICIDES, OR FERTILIZERS NEEDED FOR LANDSCAPE MAINTENANCE SHALL BE USED. LANDSCAPED AREAS SHALL BE SENSITIVE TO MINIMIZING WATER NEEDS (i.e. USE OF NATIVE PLANTS);
5. THE STORAGE, HANDLING, USE AND DISPOSAL OF ALL OVER THE COUNTER HAZARDOUS MATERIALS WITHIN THIS DEVELOPMENT SHALL BE CONSISTENT WITH THE LABELING OF THOSE MATERIALS. FAILURE TO COMPLY WITH THE LABEL WARNINGS MAY CONSTITUTE A VOLATION OF FEDERAL LAW.
6. THE CITY OF SAN ANTONIO SHALL INSPECT ALL FUTURE CONSTRUCTION OF SERVICE LATERALS AND SEWER MAINS FOR PROPER CONSTRUCTION ACCORDING TO STATE AND CITY REGULATIONS AND CODE.
7. IF ANY SOLUTION OPENINGS, CAVES, SINKHOLES, OR WELLS ARE FOUND DURING EXCAVATION, CONSTRUCTION, OR BLASTING, THE DEVELOPER SHALL NOTIFY TEXAS NATURAL RESOURCES CONSERVATION COMMISSION AT (210) 490-3096 AND THE AQUIFER STUDIES DIVISION OF THE SAN ANTONIO WATER SYSTEM AT (210) 704-7392.
8. THE AQUIFER STUDIES DIVISION STAFF SHALL HAVE THE AUTHORITY TO INSPECT THE SITE TO ENSURE THAT THE APPROVED RECOMMENDATIONS ARE BEING STRICTLY ADHERED TO DURING AND AFTER CONSTRUCTION OF THE PROJECT.

CEDAR CREEK SOUTH

(UNITS 1, 2, 3 & 4)

MASTER DEVELOPMENT & P.U.D. PLAN

PLAN HAS BEEN ACCEPTED BY

COSA

12-23-02 741
(date) (number)

If no plats are filed, plan will expire

On 6-23-04

1st plat filed on _____

PAPE-DAWSON ENGINEERS
555 EAST RAMSEY | SAN ANTONIO TEXAS 78216 | PHONE: 210.375.9000 FAX: 210.375.9010

JULY 2002

JOB NO. 5481-03

CITY OF SAN ANTONIO
02 DEC 19 PM 3:28

Date: Dec 18, 2002, 3:22pm User: ID: kdrapso
File: J:\5481\Dwgs\Cover\5481Cov.dwg

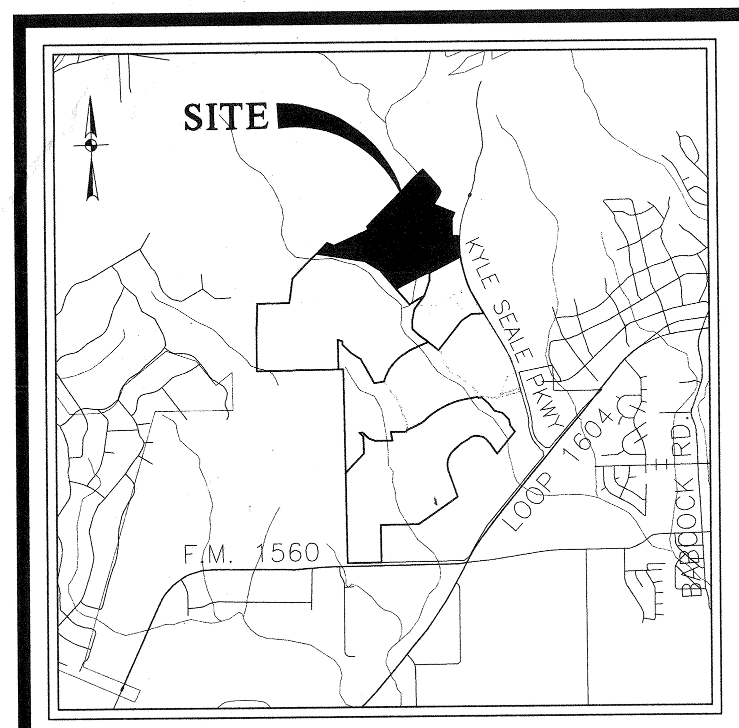

LOCATION MAP

N.T.S.

BEXAR COUNTY CLEAR VISION STATEMENT:

CLEAR VISION CALCULATIONS WILL BE BASED ON AASHTO CASE NO III B&C FOR TURNING MANUEVERS ON TO MAJOR HIGHWAYS. EASEMENTS TO BE SHOWN ON INDIVIDUAL PLATS WHEN SUBMITTED.

NAME & ADDRESS OF OWNERS WITHIN 200'

1. LAREDO SONOMA RANCH, LTD
15102 JONES MALTSBERGER, STE 101
SAN ANTONIO, TX. 75247
2. LAREDO SONOMA RANCH, LTD
15102 JONES MALTSBERGER, STE 101
SAN ANTONIO, TX. 75247

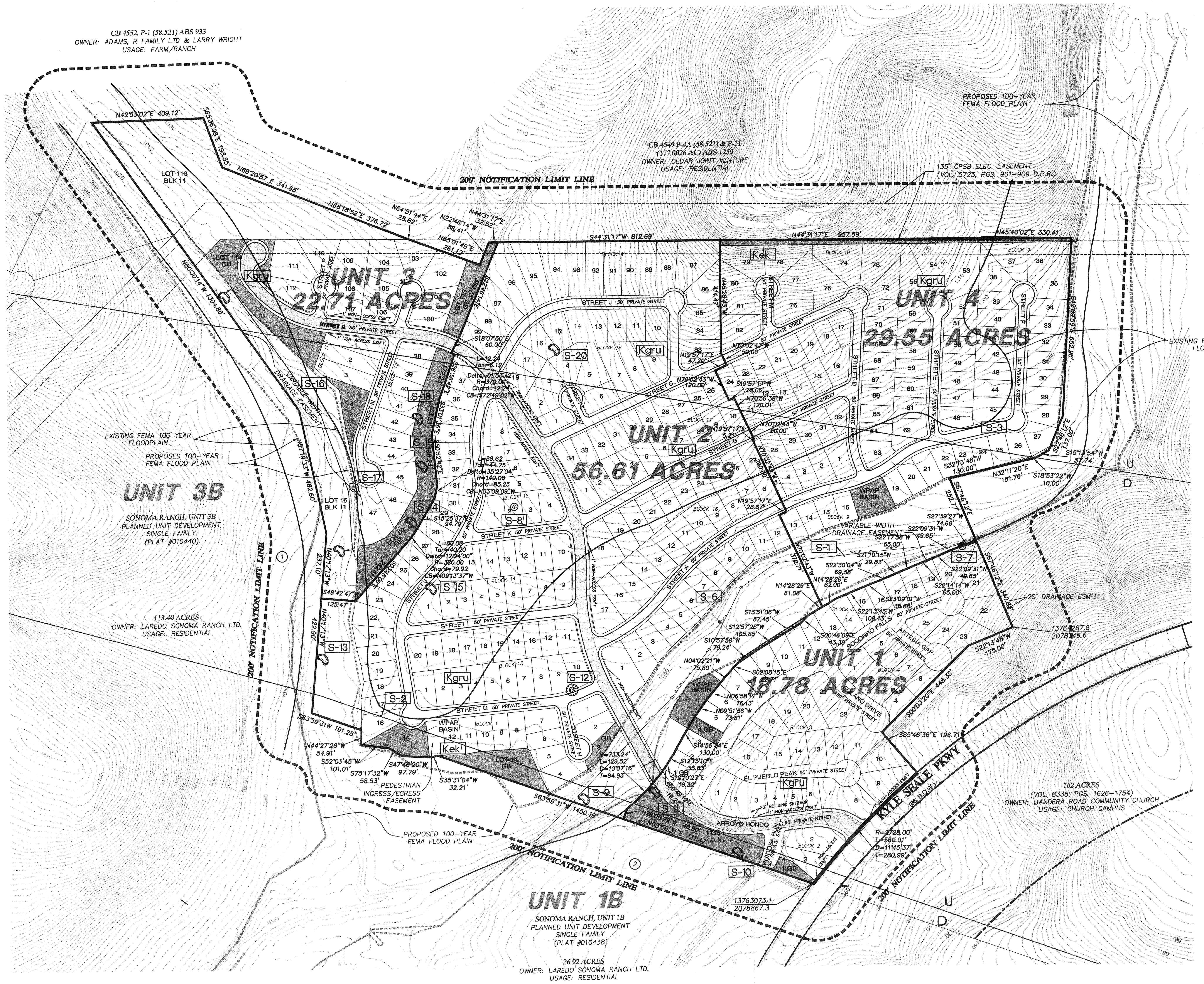

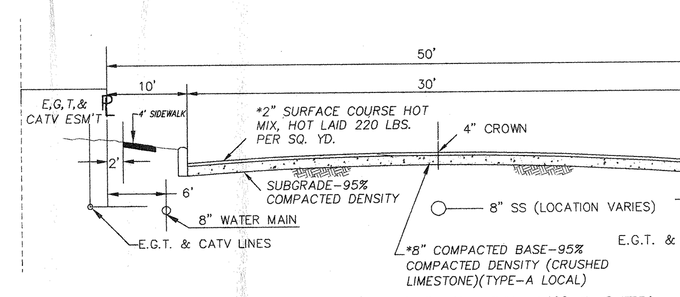

STREET CROSS-SECTION (50' R.O.W.)

N.T.S.

* PAVEMENT DESIGN THICKNESS BASED ON GEOTECHNICAL REPORT BY INTERGRATED TESTING AND ENGINEERING COMPANY

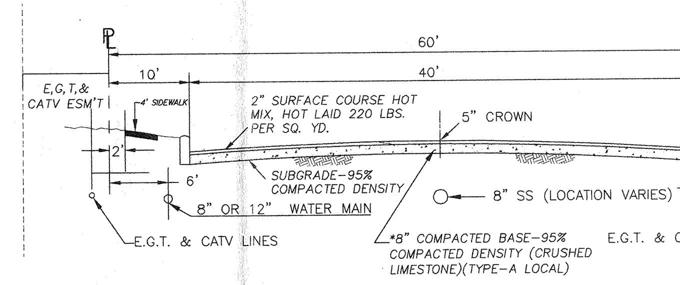

STREET CROSS-SECTION (60' R.O.W.)

N.T.S.

* PAVEMENT DESIGN THICKNESS BASED ON GEOTECHNICAL REPORT BY INTERGRATED TESTING AND ENGINEERING COMPANY

SCALE: 1" = 200'

200' 0' 100' 200' 400'

LEGEND

GREENBELT/PRIVATE COMMON AREA

PROPERTY OWNER KEY (SEE SUMMARY THIS SHEET)

LOCAL TYPE "B" STREET 60' R.O.W., 40' PAVEMENT AND 2 ~ 10' PARKWAYS

NOTES:

1) THE BEARINGS ARE BASED ON A 753.3 ACRE TRACT OF LAND DESCRIBED IN INSTRUMENT RECORDED IN VOLUME 8338, PAGES 1626-1754 OF THE OFFICIAL PUBLIC RECORDS OF REAL PROPERTY OF BEXAR COUNTY, TEXAS.

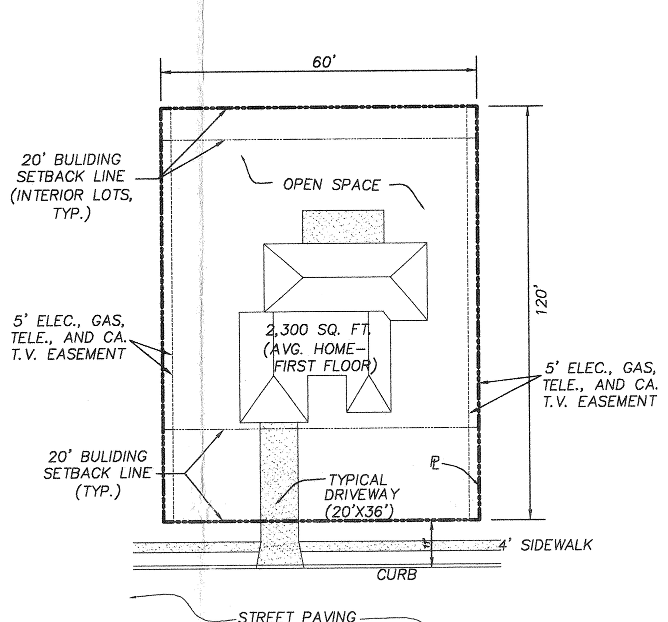

TYPICAL LOT
(60' X 120')
(NOT TO SCALE)

SENSITIVE GEOLOGIC FEATURES:
THE FOLLOWING IS A GEOLOGIC FEATURE WHICH WAS IDENTIFIED DURING A GEOLOGIC ASSESSMENT PERFORMED BY PAPE-DAWSON ENGINEERS ON MAY 30, 2002 AND WAS DETERMINED TO BE "SENSITIVE":

- S-1 — FEATURE S-1 IS AN EXISTING SANITARY LINE
- S-2, S-3 — FEATURE S-2 AND S-3 ARE FAULT ZONES IDENTIFIED THROUGH FIELD INVESTIGATION AND AERIAL PHOTOGRAPH REVIEW
- S-6 — FEATURE S-6 IS A FRACTURED ROCK ZONE THAT DOES NOT HAVE A DOMINANT TREND
- S-8 — FEATURE S-8 IS A WATER WELL OPERATED BY A WINDMILL
- S-9, S-10, S-11 — FEATURE S-9 THROUGH S-11 ARE CLOSED DEPRESSIONS CREATED BY STREAM SCOUR
- S-12 — FEATURE S-12 IS A SINKHOLE THAT IS FILLED WITH LEAF LITTER, SOIL, AND SOME LOOSE ROCK. THERE IS NO EXPOSED RIMROCK. A LOW SOIL BERM IS PRESENT ALONG A PORTION OF THE SINKHOLE RIM, WHICH SUGGESTS A POSSIBLE MANMADE ORIGIN. MINOR HAND EXCAVATION REVEALED CLAYEY SOIL WITH COBBLES.
- S-13, S-14 — FEATURE S-13 NAD S-14 ARE CLOSED DEPRESSIONS CREATED BY STREAM SCOUR
- S-15 — FEATURE S-15 IS A MAN MADE CLOSED DEPRESSION CREATED BY QUARRYING ROCK
- S-16 — FEATURE S-16 IS A ZONE OF CLOSED DEPRESSIONS CREATED BY STREAM SCOUR
- S-17 — FEATURE S-17 APPEARS TO BE A NARROW PALEOSPRING CAVE
- S-18, S-19 — FEATURE S-18 AND S-19 ARE CLOSED DEPRESSIONS CREATED BY STREAM SCOUR

SANITARY SEWER: SAN ANTONIO WATER SYSTEM
WATER: SAN ANTONIO WATER SYSTEM
GAS AND ELECTRIC: CITY PUBLIC SERVICE
TELEPHONE: SOUTHWESTERN BELL TELEPHONE COMPANY

ENGINEER: PAPE-DAWSON ENGINEERS
555 E. RAMSEY
SAN ANTONIO, TX 78216
OFFICE: (210) 375-9000
FAX: (210) 375-9010

DEVELOPER: LAREDO SONOMA RANCH, LTD.
15102 JONES MALTSBERGER, SUITE #101
SAN ANTONIO, TEXAS 78247

CITY OF SAN ANTONIO
DEPARTMENT OF PLANNING
02 DEC 19 PM 3:28

PHASE/ UNIT	ESTIMATED COMPLETION DATE	LAND USE	GROSS AREA (Ac.)	No. OF BUILDABLE LOTS	DENSITY (LOTS/Ac.)
1	AUG. 2002	SINGLE FAMILY RESIDENTIAL	18.78	55	2.9
2	JUNE 2003	SINGLE FAMILY RESIDENTIAL	56.61	165	2.9
3	DEC. 2003	SINGLE FAMILY RESIDENTIAL	22.71	27	1.2
4	JUNE 2004	SINGLE FAMILY RESIDENTIAL	29.55	91	3.1
		TOTALS/AVERAGE	127.65	338	2.6

CEDAR CREEK SOUTH UNIT I, II, III, & IV OPEN AREA CALCULATIONS
(IN ACRES)

Description	UNIT I	UNIT II	UNIT III	UNIT IV	TOTAL
No. of Lots	55	165	25	91	338
Gross Area	18.78	56.61	22.71	29.55	127.65
Building Coverage	2.90	8.71	1.43	4.80	17.85
Other Coverages					
a. Streets	2.91	6.88	1.78	2.9	14.47
b. Sidewalks	0.53	1.50	0.35	0.69	3.07
c. Driveway	0.91	2.73	0.45	1.50	5.59
d. 50% Drain	0.07	0.41	0.00	0.24	0.72
Total Coverages	7.38	20.22	4.00	10.14	41.69
Open Spaces					
a. Greenbelts/buffers	1.50	8.03	12.82	3.68	26.03
b. Residential Lots	8.94	25.90	5.36	14.46	54.66
c. 50% Drain	0.07	0.41	0.00	0.24	0.72
d. Parkway	0.95	2.05	0.40	1.02	4.42
Total Open Space	11.46	36.39	18.58	19.40	85.82

Open Space Ratio $= \frac{85.82}{127.65} \times 100 = 67.23\%$

PUD PLAN NOTES:

1. DRAINS FROM STREETS ARE PRIVATELY MAINTAINED BY THE HOMEOWNERS ASSOCIATION.
2. STREETS ARE TYPE "A" 50' R.O.W. UNLESS OTHERWISE INDICATED AND ARE PRIVATE.
3. SANITARY SEWER SYSTEM TO BE DEDICATED TO THE SAN ANTONIO WATER SYSTEM.
4. WATER SYSTEM TO BE DEDICATED TO THE SAN ANTONIO WATER SYSTEM.
5. ALL CORNER LOTS SHALL COMPLY WITH THE CLEAR VISION AREA AS REQUIRED BY SEC 35-3339.
6. PROPERTY IS LOCATED OVER THE EDWARDS AQUIFER RECHARGE ZONE.
7. PROPERTY IS OUTSIDE THE CITY LIMITS AND LOCATED WITHIN THE ETJ THEREFORE IT IS NOT SUBJECT TO ZONING RESTRICTIONS.
8. ALL PROPERTY SHOWN AS GREENBELT/COMMON AREA WILL BE PASSIVE OPEN SPACE.

ENVIRONMENTAL RECOMMENDATIONS:

1. THAT THE CAVES REMAIN OPEN WITH A BUFFER ZONE DESIGNED PER THE CRITERIA CONTAINED IN SEC 34-920(b) OF ORDINANCE NO. 81491 OR OTHER APPROVED CRITERIA. THE CALCULATIONS FOR DETERMINING THE BUFFER ZONE AROUND THE CAVE SHALL BE SUBMITTED TO AND APPROVED BY SAWS PRIOR TO THE COMMENCEMENT OF CONSTRUCTION. THE CAVE MAY BE BUFFERED BY HAVING THE CAVE SURROUNDED BY A GREENBELT AND/OR CONSERVATION EASEMENT AS PART OF THE DRAINAGE EASEMENT. THE OPENING OF THE CAVE SHALL BE GRATED TO PREVENT UNAUTHORIZED ENTRANCE AND TO PROVIDE A DEGREE OF SAFETY;

2. PRIOR TO THE RELEASE OF ANY BUILDING PERMITS FOR ADDITIONAL DEVELOPMENTS, THE FOLLOWING SHALL BE SUBMITTED TO THE AQUIFER STUDIES DIVISION OF THE SAN ANTONIO WATER SYSTEM;
A. A WATER POLLUTION ABATEMENT PLAN SHALL BE SUBMITTED FOR EACH PARTICULAR DEVELOPMENT/USE WITHIN THE AREA BEING CONSIDERED.
B. A SET OF SITE SPECIFIC PLANS WHICH MUST HAVE AS SIGNED ENGINEERS SEAL FROM THE STATE OF TEXAS;
C. A LETTER FROM THE TEXAS NATURAL RESOURCE CONSERVATION COMMISSION APPROVING EACH WATER POLLUTION
D. A COPY OF THE APPROVED WATER POLLUTION ABATEMENT PLAN.

3. ANY AREAS PLATTED AS DRAINAGE RIGHT-OF-WAYS BE KEPT IN A VEGETATED CONDITION.

4. ONLY A MINIMAL AMOUNT OF PESTICIDES, HERBICIDES, OR FERTILIZERS NEEDED FOR LANDSCAPE MAINTENANCE SHALL BE USED. LANDSCAPED AREAS SHALL BE SENSITIVE TO MINIMIZING WATER NEEDS (i.e. USE OF NATIVE PLANTS);

5. THE STORAGE, HANDLING, USE AND DISPOSAL OF ALL OVER THE COUNTER HAZARDOUS MATERIALS WITHIN THIS DEVELOPMENT SHALL BE CONSISTENT WITH THE LABELING OF THOSE MATERIALS. FAILURE TO COMPLY WITH THE LABEL WARNINGS MAY CONSTITUTE A VIOLATION OF FEDERAL LAW.

6. THE CITY OF SAN ANTONIO SHALL INSPECT ALL FUTURE CONSTRUCTION OF SERVICE LATERALS AND SEWER MAINS FOR PROPER CONSTRUCTION ACCORDING TO STATE AND CITY REGULATIONS AND CODE.

7. IF ANY SOLUTION OPENINGS, CAVES, SINKHOLES, OR WELLS ARE FOUND DURING EXCAVATION, CONSTRUCTION, OR BLASTING, THE DEVELOPER SHALL NOTIFY TEXAS NATURAL RESOURCES CONSERVATION COMMISSION AT (210) 490-3096 AND THE AQUIFER STUDIES DIVISION OF THE SAN ANTONIO WATER SYSTEM AT (210) 704-7392.

8. THE AQUIFER STUDIES DIVISION STAFF SHALL HAVE THE AUTHORITY TO INSPECT THE SITE TO ENSURE THAT THE APPROVED RECOMMENDATIONS ARE BEING STRICTLY ADHERED TO DURING AND AFTER CONSTRUCTION OF THE PROJECT.

Date: Dec 18, 2002, 3:22pm User ID: ksiragusa
File: P:\54\81\00\Design\Civil\pud548100.dwg

NOTE:
1. ALL INTERNAL STREETS WITHIN THE P.O.A.D.P. LIMITS ARE LOCAL TYPE "A" W/A 50' R.O.W, 30' PAVEMENT AND 2-10' PARKWAYS, EXCEPT AS NOTED.
2. PROPERTY IS OUTSIDE THE CITY LIMITS OF THE CITY OF SAN ANTONIO.
3. PROPERTY IS WITHIN THE EDWARDS AQUIFER RECHARGE ZONE.
4. PROPERTY IS LOCATED WITHIN KYLE SEALE RANCH 1,325 ACRE TRACT DEVELOPMENT RIGHTS PERMIT AREA, PERMIT NO. 238.
5. THE BEARINGS FOR THIS SURVEY ARE BASED ON THE DEED OF THE 735.3 ACRE TRACT AS RECORDED IN VOLUME 8338, PAGES 1626-1754 O.P.R.

DEVELOPMENT PHASING:
UNIT 1 = CONSTRUCTION WILL BEGIN BY OCTOBER, 2002.
UNIT 2 = JUNE 2003

PUD PLAN NO.: ______
APPROVED BY THE PLANNING COMMISION OF THE CITY OF SAN ANTONIO

CHAIRMAN: ______ ***DATE:*** ______

SECRETARY: ______ ***DATE:*** ______

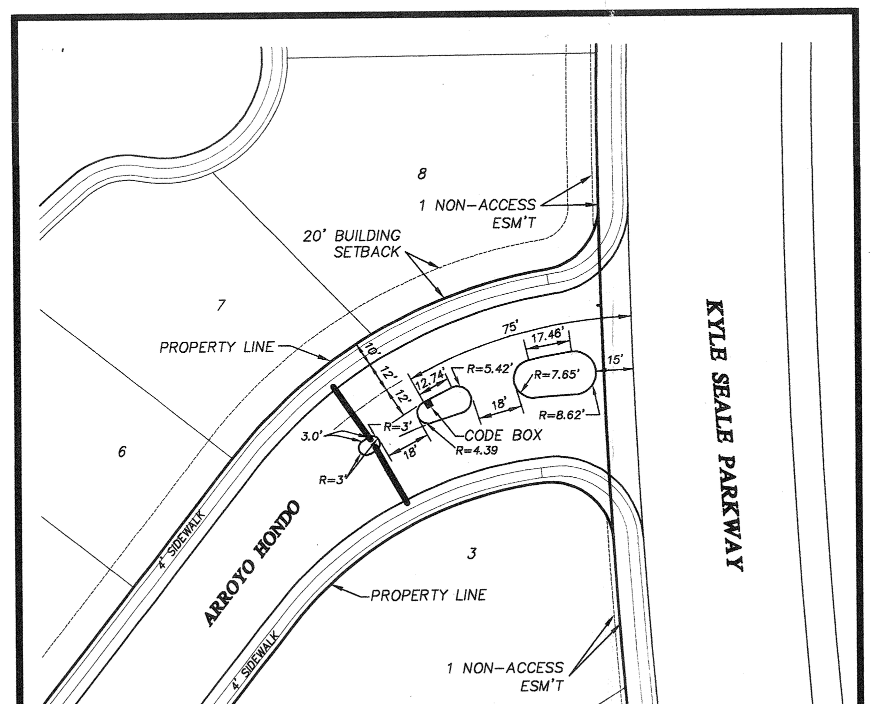

ENTRANCE INTO UNIT 1
1"=50'

CEDAR CREEK SOUTH
(UNITS 1, 2, 3 & 4)
MASTER DEVELOPMENT & P.U.D. PLAN

PLAN HAS BEEN ACCEPTED BY
COSA
12-23-02 #741
(date) (number)
If no plats are filed, plan will expire
On 6-23-04
1st plat filed on ______

PAPE-DAWSON ENGINEERS
555 EAST RAMSEY | SAN ANTONIO TEXAS 78216 | PHONE: 210.375.9000 FAX: 210.375.9010
JULY 2002
JOB NO. 5481-03

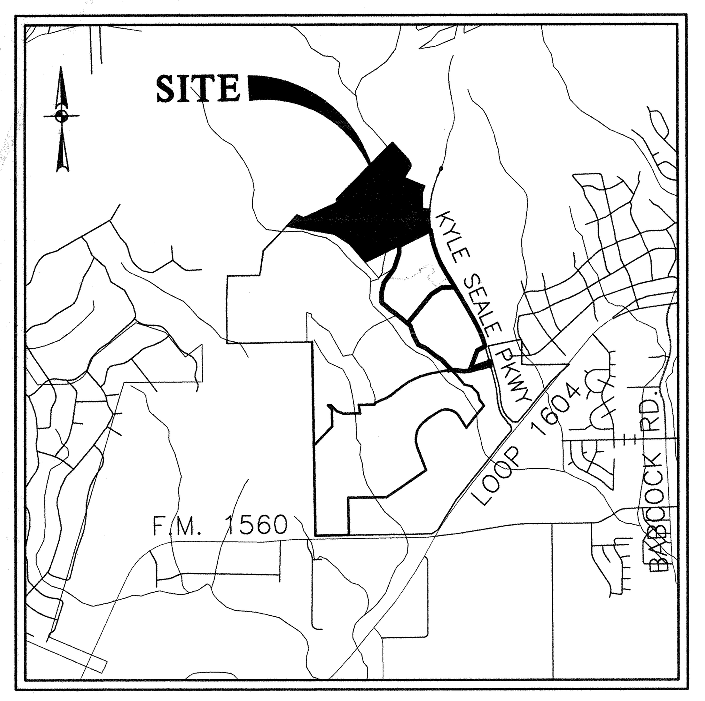

LOCATION MAP

N.T.S.

BEXAR COUNTY CLEAR VISION STATEMENT:

CLEAR VISION CALCULATIONS WILL BE BASED ON AASHTO CASE NO III B&C FOR TURNING MANUEVERS ON TO MAJOR HIGHWAYS. EASEMENTS TO BE SHOWN ON INDIVIDUAL PLATS WHEN SUBMITTED.

NAME & ADDRESS OF OWNERS WITHIN 200'

1. LAREDO SONOMA RANCH, LTD 15102 JONES MALTSBERGER, STE 101 SAN ANTONIO, TX. 78247
2. CEDAR CREEK JOINT VENTURE 13455 NOEL RD STE 2000 DALLAS, TX. 75240
3. MEDALLION, LTD 6929 CAMP BULLIS RD SAN ANTONIO, TX. 78256
4. CLAYTON M DAYOC & REBECCA CRUM 15723 LUNA RIDGE HELOTES, TX. 78023
5. BRIAN K &AMANDA GROOVER & LARRY A BIGGERS 15618 LUNA RIDGE HELOTES, TX. 78023
6. JENNIFER A & CRAIG S WILLIAMS 15710 LUNA RIDGE HELOTES, TX. 78023
7. PHILLIP A & MARTHA F MIDDLETON 15625 PORTALES PASS HELOTES, TX. 78023
8. SIERRA GEN CONSTRUCTION, LTD 15102 JONES MALTSBERGER, STE 101 SAN ANTONIO, TX. 78247
9. GREGORY J & DEBRA K TEMPLE 3642 EAGLE CANYON DR SAN ANTONIO, TX. 78247
10. KENT A & SHERI L JANES 414 CANDELARIA EAGLE CANYON DR HELOTES, TX. 78023
11. CITY OF SAN ANTONIO PO BOX 839966 SAN ANTONIO, TX. 78283
12. BANDERA RD COMMUNITY CHURCH 9355 BANDERA RD STE 124 SAN ANTONIO, TX. 78250

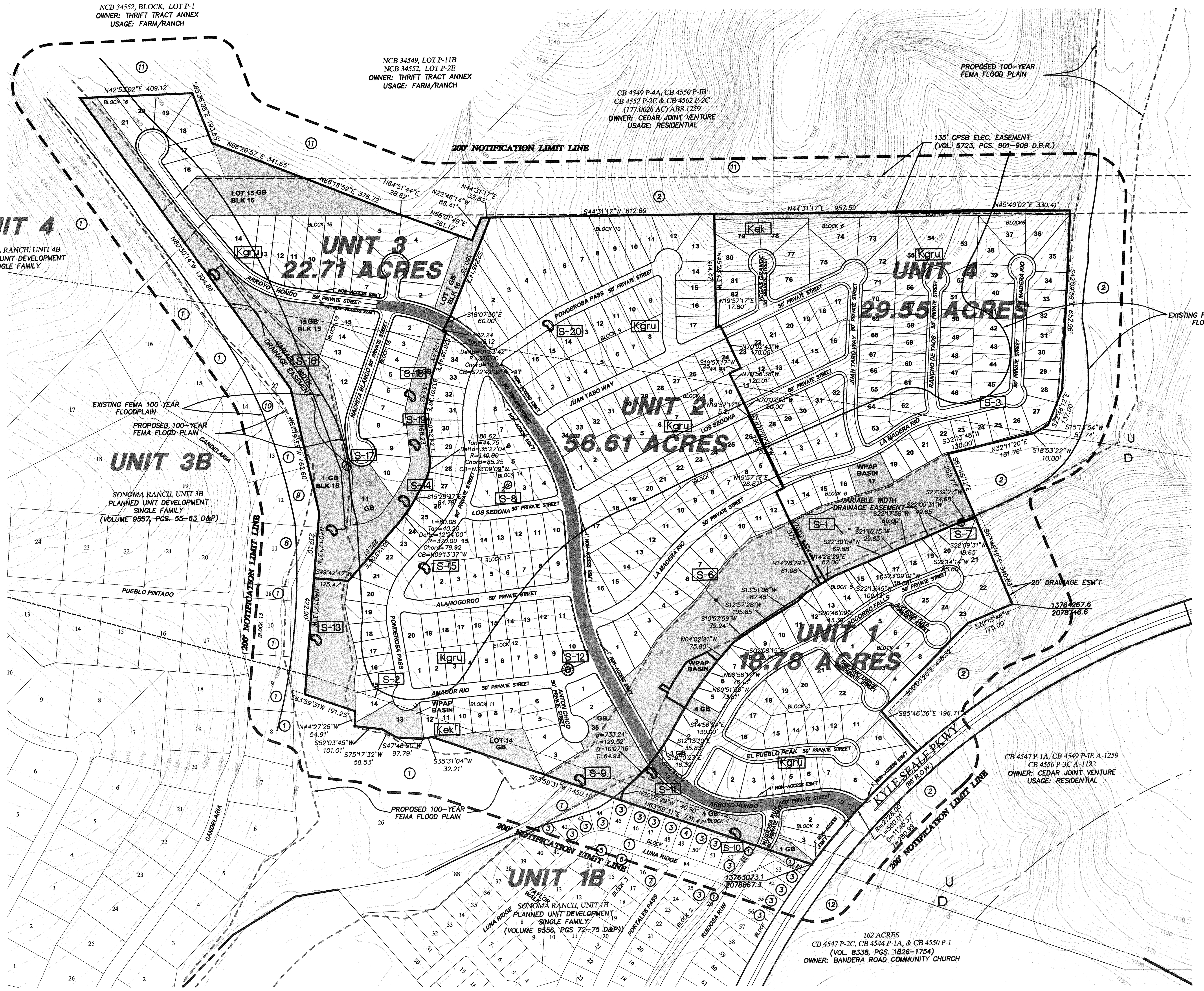

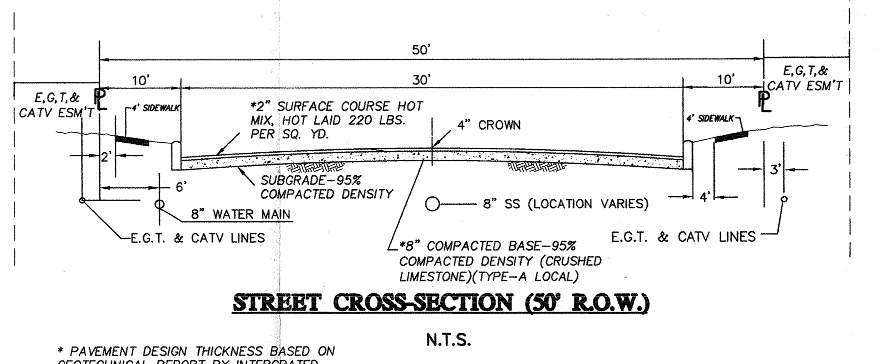

STREET CROSS-SECTION (50' R.O.W.)

N.T.S.

* PAVEMENT DESIGN THICKNESS BASED ON GEOTECHNICAL REPORT BY INTERGRATED TESTING AND ENGINEERING COMPANY

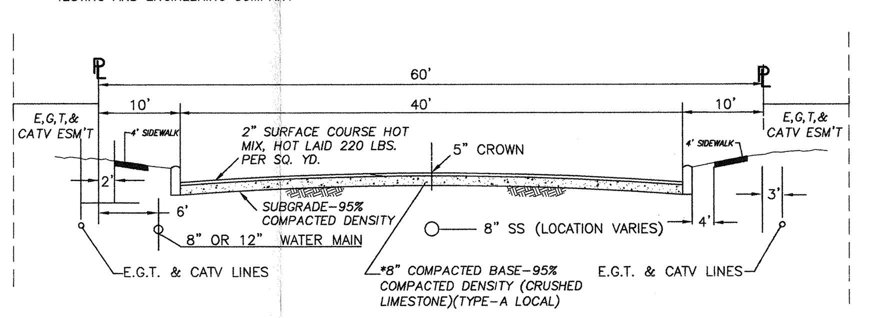

STREET CROSS-SECTION (60' R.O.W.)

N.T.S.

* PAVEMENT DESIGN THICKNESS BASED ON GEOTECHNICAL REPORT BY INTERGRATED TESTING AND ENGINEERING COMPANY

SCALE: 1" = 200'

200' 0' 100' 200' 400'

LEGEND

- GREENBELT/PRIVATE COMMON AREA
- (1) PROPERTY OWNER KEY (SEE SUMMARY THIS SHEET)
- LOCAL TYPE "B" STREET 60' R.O.W., 40' PAVEMENT AND 2 ~ 10' PARKWAYS

NOTES:

1) THE BEARINGS ARE BASED ON A 753.3 ACRE TRACT OF LAND DESCRIBED IN INSTRUMENT RECORDED IN VOLUME 8338, PAGES 1626-1754 OF THE OFFICIAL PUBLIC RECORDS OF REAL PROPERTY OF BEXAR COUNTY, TEXAS.

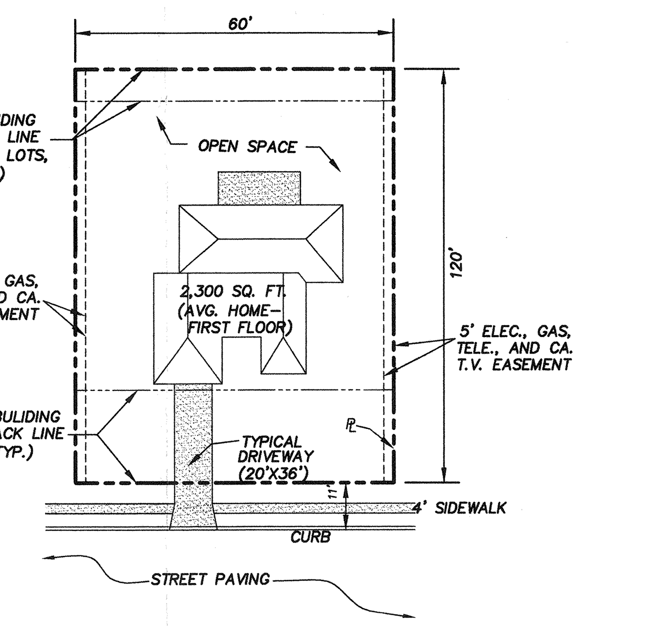

TYPICAL LOT
(60' X 120')
(NOT TO SCALE)

SENSITIVE GEOLOGIC FEATURES:
THE FOLLOWING IS A GEOLOGIC FEATURE WHICH WAS IDENTIFIED DURING A GEOLOGIC ASSESSMENT PERFORMED BY PAPE-DAWSON ENGINEERS ON MAY 30, 2002 AND WAS DETERMINED TO BE "SENSITIVE":

S-1	FEATURE S-1 IS AN EXISTING SANITARY LINE
S-2, S-3	FEATURE S-2 AND S-3 ARE FAULT ZONES IDENTIFIED THROUGH FIELD INVESTIGATION AND AERIAL PHOTOGRAPH REVIEW
S-6	FEATURE S-6 IS A FRACTURED ROCK ZONE THAT DOES NOT HAVE A DOMINANT TREND
S-8	FEATURE S-8 IS A WATER WELL OPERATED BY A WINDMILL
S-9, S-10, S-11	FEATURE S-9 THROUGH S-11 ARE CLOSED DEPRESSIONS CREATED BY STREAM SCOUR
S-12	FEATURE S-12 IS A SINKHOLE THAT IS FILLED WITH LEAF LITTER, SOIL, AND SOME LOOSE ROCK. THERE IS NO EXPOSED RIMROCK. A LOW SOIL BERM IS PRESENT ALONG A PORTION OF THE SINKHOLE RIM, WHICH SUGGESTS A POSSIBLE MANMADE ORIGIN. MINOR HAND EXCAVATION REVEALED CLAYEY SOIL WITH COBBLES.
S-13, S-14	FEATURE S-13 NAD S-14 ARE CLOSED DEPRESSIONS CREATED BY STREAM SCOUR
S-15	FEATURE S-15 IS A MAN MADE CLOSED DEPRESSION CREATED BY QUARRYING ROCK
S-16	FEATURE S-16 IS A ZONE OF CLOSED DEPRESSIONS CREATED BY STREAM SCOUR
S-17	FEATURE S-17 APPEARS TO BE A NARROW PALEOSPRING CAVE
S-18, S-19	FEATURE S-18 AND S-19 ARE CLOSED DEPRESSIONS CREATED BY STREAM SCOUR

OUTLINE OF AMENDMENT

1. DELETED SMALL CUL-DE-SAC STREET "L" LOCATED WITHIN THE INNER BLOCK OF THE EASTERN PORTION OF UNIT-2 NORTH OF STREET "J". DELETED SMALL CUL-DE-SAC STREET "P" LOCATED WITHIN THE WESTERN PORTION OF UNIT-3 NORTH OF STREET "Q."
2. ELIMINATED THE HORIZONTAL CURVATURE AT STREET "J" TO SIMPLIFY THE GEOMETRY OF THE ROAD, TO IMPROVE TRAFFIC CIRCULATION AND EXTENDED STREET "Q" TO PROVIDE A MORE EFFICIENT ARRANGEMENT OF LOT LAYOUT.
3. ADDED ONE LOT TO UNIT II FROM UNIT IV TO HAVE A BETTER LINE DIVISION BETWEEN THE TWO UNITS.
4. OVERLAY THE OPEN SPACE AREA AT LOT 116 THE NORTHWEST SIDE OF THE PROPERTY WITH ADDITIONAL RESIDENTIAL LOTS.
5. CORRECTED SUMMATIONS OF DATA IN THE OPEN AREA CALCULATIONS TABLE THAT WERE ERRONOUS IN THE PREVIOUS PLAN.
6. UPDATED OPEN SPACE RATIO FROM THE CORRECTED DATA.
7. ADDED APPROVED STREET NAMES AND ADJUSTED LOT AND BLOCK NUMBERS BASED ON NEW LOT LAYOUT.
8. CORRECTED THE SHADING ON 60' LOCAL TYPE "B" PRIVATE STREET AND GREENBELTS.
9. UPDATED ADJACENT PROERTY OWNER INFORMATION.

SANITARY SEWER:	SAN ANTONIO WATER SYSTEM
WATER:	SAN ANTONIO WATER SYSTEM
GAS AND ELECTRIC:	CITY PUBLIC SERVICE
TELEPHONE:	SOUTHWESTERN BELL TELEPHONE COMPANY

ENGINEER: PAPE-DAWSON ENGINEERS
555 E. RAMSEY
SAN ANTONIO, TX 78216
OFFICE: (210) 375-9000
FAX: (210) 375-9010

DEVELOPER: LAREDO SONOMA RANCH, LTD.
15102 JONES MALTSBERGER, SUITE #101
SAN ANTONIO, TEXAS 78247

PHASE/ UNIT	ESTIMATED COMPLETION DATE	LAND USE	GROSS AREA (Ac.)	No. OF BUILDABLE LOTS	DENSITY (LOTS/Ac.)
1	AUGUST 2002	SINGLE FAMILY RESIDENTIAL	18.78	55	2.9
2	AUGUST 2004	SINGLE FAMILY RESIDENTIAL	56.79	166	2.9
3	APRIL 2005	SINGLE FAMILY RESIDENTIAL	22.71	32	1.4
4	JUNE 2005	SINGLE FAMILY RESIDENTIAL	29.37	90	3.1
		TOTALS/AVERAGE	127.65	343	2.7

CEDAR CREEK SOUTH UNIT I, II, III, & IV OPEN AREA CALCULATIONS
(IN ACRES)

Description	UNIT I	UNIT II	UNIT III	UNIT IV	TOTAL
No. of Lots	55	166	32	90	343
Gross Area	18.78	56.79	22.71	29.37	127.65
Building Coverage	2.90	8.76	1.69	4.75	18.10
Other Coverages					
a. Streets	2.91	6.88	1.88	2.9	14.57
b. Sidewalks	0.53	1.50	0.43	0.69	3.15
c. Driveway	0.91	2.74	0.52	1.49	5.66
d. 50% Drain	0.07	0.41	0.00	0.24	0.72
Total Coverages	7.38	20.29	4.52	10.07	42.26
Open Spaces					
a. Greenbelts/buffers	1.50	8.41	9.95	3.68	23.16
b. Residential Lots	8.94	25.27	7.73	14.36	56.68
c. 50% Drain	0.07	0.41	0.00	0.24	0.72
d. Parkway	0.95	2.05	0.51	1.02	4.53
Total Open Space	11.46	36.14	18.19	19.30	85.09

Open Space Ratio $= \frac{85.09}{127.65} \times 100 = 66.66\%$

PUD PLAN NOTES:

1. DRAINS FROM STREETS ARE PRIVATELY MAINTAINED BY THE HOMEOWNERS ASSOCIATION.
2. STREETS ARE LOCAL TYPE "A" 50' PRIVATE STREETS UNLESS OTHERWISE INDICATED.
3. SANITARY SEWER SYSTEM TO BE DEDICATED TO THE SAN ANTONIO WATER SYSTEM.
4. WATER SYSTEM TO BE DEDICATED TO THE SAN ANTONIO WATER SYSTEM.
5. ALL CORNER LOTS SHALL COMPLY WITH THE CLEAR VISION AREA AS REQUIRED BY SEC 35-3339.
6. PROPERTY IS LOCATED OVER THE EDWARDS AQUIFER RECHARGE ZONE.
7. PROPERTY IS OUTSIDE THE CITY LIMITS AND LOCATED WITHIN THE ETJ THEREFORE IT IS NOT SUBJECT TO ZONING RESTRICTIONS.
8. ALL PROPERTY SHOWN AS GREENBELT/COMMON AREA WILL BE PASSIVE OPEN SPACE.
9. SIDEWALKS TO BE INSTALLED PER UDC ARTICLE 5, DIVISION 2:35-506(Q).

ENVIRONMENTAL RECOMMENDATIONS:

1. THAT THE CAVES REMAIN OPEN WITH A BUFFER ZONE DESIGNED PER THE CRITERIA CONTAINED IN SEC 34-920(b) OF ORDINANCE NO. 81491 OR OTHER APPROVED CRITERIA. THE CALCULATIONS FOR DETERMINING THE BUFFER ZONE AROUND THE CAVE SHALL BE SUBMITTED TO AND APPROVED BY SAWS PRIOR TO THE COMMENCEMENT OF CONSTRUCTION. THE CAVE MAY BE BUFFERED BY HAVING THE CAVE SURROUNDED BY A GREENBELT AND/OR CONSERVATION EASEMENT AS PART OF THE DRAINAGE EASEMENT. THE OPENING OF THE CAVE SHALL BE GRATED TO PREVENT UNAUTHORIZED ENTRANCE AND TO PROVIDE A DEGREE OF SAFETY;
2. PRIOR TO THE RELEASE OF ANY BUILDING PERMITS FOR ADDITIONAL DEVELOPMENTS, THE FOLLOWING SHALL BE SUBMITTED TO THE AQUIFER STUDIES DIVISION OF THE SAN ANTONIO WATER SYSTEM;
   A. A WATER POLLUTION ABATEMENT PLAN SHALL BE SUBMITTED FOR EACH PARTICULAR DEVELOPMENT/USE WITHIN THE AREA BEING CONSIDERED.
   B. A SET OF SITE SPECIFIC PLANS WHICH MUST HAVE AS SIGNED ENGINEERS SEAL FROM THE STATE OF TEXAS;
   C. A LETTER FROM THE TEXAS COMMISSION ON ENVIRONMENTAL QUALITY APPROVING EACH WATER POLLUTION
   D. A COPY OF THE APPROVED WATER POLLUTION ABATEMENT PLAN.
3. ANY AREAS PLATTED AS DRAINAGE RIGHT-OF-WAYS BE KEPT IN A VEGETATED CONDITION.
4. ONLY A MINIMAL AMOUNT OF PESTICIDES, HERBICIDES, OR FERTILIZERS NEEDED FOR LANDSCAPE MAINTENANCE SHALL BE USED. LANDSCAPED AREAS SHALL BE SENSITIVE TO MINIMIZING WATER NEEDS (i.e. USE OF NATIVE PLANTS);
5. THE STORAGE, HANDLING, USE AND DISPOSAL OF ALL OVER THE COUNTER HAZARDOUS MATERIALS WITHIN THIS DEVELOPMENT SHALL BE CONSISTENT WITH THE LABELING OF THOSE MATERIALS. FAILURE TO COMPLY WITH THE LABEL WARNINGS MAY CONSTITUTE A VIOLATION OF FEDERAL LAW.
6. THE CITY OF SAN ANTONIO SHALL INSPECT ALL FUTURE CONSTRUCTION OF SERVICE LATERALS AND SEWER MAINS FOR PROPER CONSTRUCTION ACCORDING TO STATE AND CITY REGULATIONS AND CODE.
7. IF ANY SOLUTION OPENINGS, CAVES, SINKHOLES, OR WELLS ARE FOUND DURING EXCAVATION, CONSTRUCTION, OR BLASTING, THE DEVELOPER SHALL NOTIFY TEXAS NATURAL RESOURCES CONSERVATION COMMISSION AT (210) 490-3096 AND THE AQUIFER STUDIES DIVISION OF THE SAN ANTONIO WATER SYSTEM AT (210) 704-7392.
8. THE AQUIFER STUDIES DIVISION STAFF SHALL HAVE THE AUTHORITY TO INSPECT THE SITE TO ENSURE THAT THE APPROVED RECOMMENDATIONS ARE BEING STRICTLY ADHERED TO DURING AND AFTER CONSTRUCTION OF THE PROJECT.

NOTE:

1. ALL INTERNAL STREETS WITHIN THE P.O.A.D.P. LIMITS ARE LOCAL TYPE "A" W/A 50' R.O.W, 30' PAVEMENT AND 2-10' PARKWAYS, EXCEPT AS NOTED.
2. PROPERTY IS OUTSIDE THE CITY LIMITS OF THE CITY OF SAN ANTONIO.
3. PROPERTY IS WITHIN THE EDWARDS AQUIFER RECHARGE ZONE.
4. PROPERTY IS LOCATED WITHIN KYLE SEALE RANCH 1,325 ACRE TRACT DEVELOPMENT RIGHTS PERMIT AREA, PERMIT NO. 238.
5. THE BEARINGS FOR THIS SURVEY ARE BASED ON THE DEED OF THE 735.3 ACRE TRACT AS RECORDED IN VOLUME 8338, PAGES 1626-1754 O.P.R.

DEVELOPMENT PHASING:

UNIT 1 = CONSTRUCTION WILL BEGIN BY OCTOBER, 2002.
UNIT 2 = JUNE 2003
UNIT 3 = AUGUST 2004
UNIT 4 = JANUARY 2005

PUD PLAN NO.: ____________
APPROVED BY THE PLANNING COMMISION OF THE CITY OF SAN ANTONIO

CHAIRMAN: ____________ ***DATE:*** ____________

SECRETARY: ____________ ***DATE:*** ____________

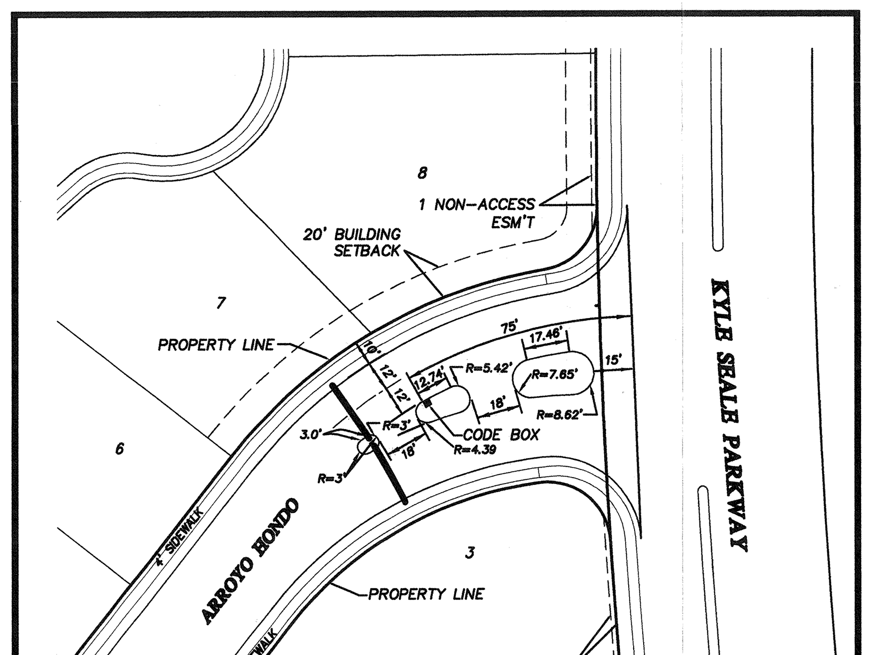

ENTRANCE INTO UNIT 1
1"=50'

AMENDMENT TO CEDAR CREEK SOUTH

(UNITS 1, 2, 3 & 4)

MASTER DEVELOPMENT & P.U.D. PLAN

THIS PLAN AMENDS PUD PLAN NO. 02-014 APPROVED BY THE PLANNING COMMISSION ON JANUARY 22, 2003

A 127.65 ACRE TRACT OF LAND OUT OF A 121.4 ACRE TRACT OF LAND DESCRIBED IN INSTRUMENT RECORDED IN VOLUME 8899, PAGES 656-661 AND A SMALL PORTION OUT OF THE 735.3 ACRE TRACT OF LAND DESCRIBED IN INSTRUMENT RECORDED IN VOLUME 8338, PAGES 1626-1659 OF THE OFFICIAL PUBLIC RECORDS OF REAL PROPERTY OF BEXAR COUNTY, TEXAS, AND OUT OF THE H.E. & W.T.R.R. CO. SURVEY NO. 1, ABSTRACT 933, COUNTY BLOCK 4552, THE JESUS MARTINEZ SURVEY NO. 423, ABSTRACT 540, COUNTY BLOCK 4550 AND THE CALEDONIO CADENA SURVEY NO. 422, ABSTRACT 186, COUNTY BLOCK 4551 OF BEXAR COUNTY, TEXAS.

PLAN HAS BEEN ACCEPTED BY
COSA [signature]
5/26/04 741-A
(date) (number)
If no plats are filed, plan will expire
On 11/25/05
1st plat filed on ____

PAPE-DAWSON ENGINEERS
555 EAST RAMSEY | SAN ANTONIO TEXAS 78216 | PHONE: 210.375.9000 FAX: 210.375.9010

MAY 2004

JOB NO. 5481-08

Date: May 24, 2004, 2:46pm User ID: ACeja
File: P:\54\81\08\Design\Civil\pud548100-R1.dwg