LOCATION MAP

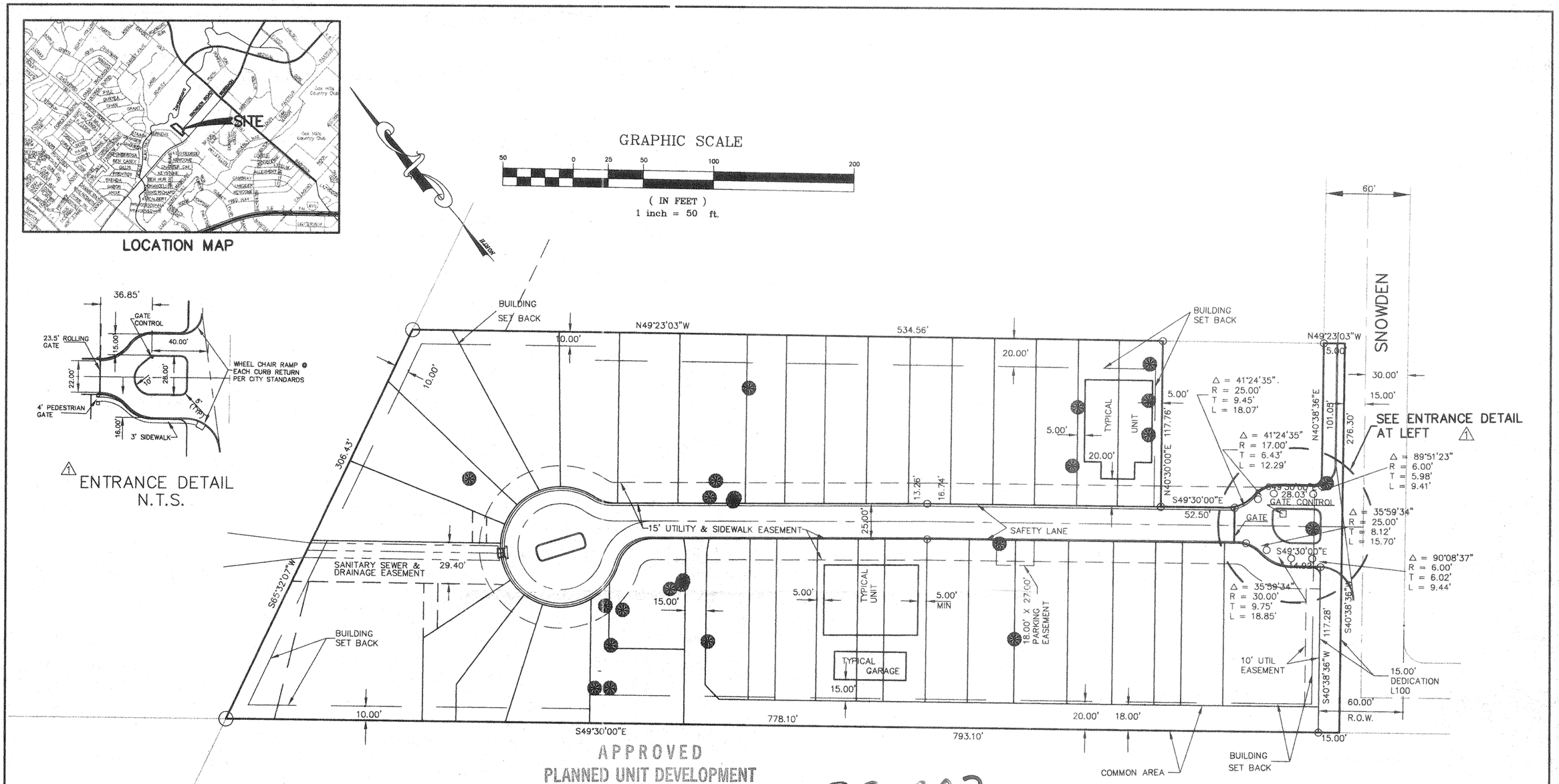

ENTRANCE DETAIL
N.T.S.

APPROVED
PLANNED UNIT DEVELOPMENT
Planning Commission
City of San Antonio
Chairman: Theresa K. Grohman 2-11-98
Secretary: [signature] Date:

98-003

VILLAS OF OAKCREEK PUD

PLAT NO. 98-0001

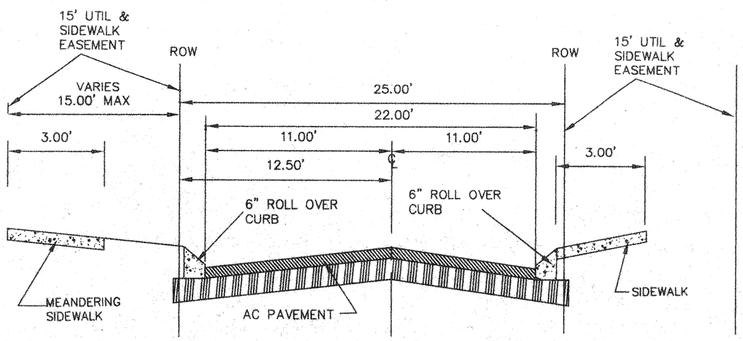

TYPICAL STREET SECTION
N.T.S.

DESCRIPTION – 4.3 ACRES BEING A PORTION OF LOT 8, BLOCK B, NCB 11609

ZONING – P-1, R3

OPEN SPACE COMPUTATIONS

MINIMUM REQUIRED OPEN SPACE = 35%	
TOTAL PROJECT AREA –	188,000 SF
STREETS	–27,200 SF
BUILDING SLABS INCL DRIVEWAY & GARAGES	–64,000 SF
TOTAL OPEN SPACE	96,800 SF

PROPOSED PERCENT OF OPEN SPACE – 52%
DENSITY = 8.8 +/– UNITS PER ACRE

PROJECT OWNER:
MR. G. MICHAEL KYRISH
9820 LORENE
SAN ANTONIO, TEXAS 78216
(210) 366-3338

CEC
CIVIL ENGINEERING CONSULTANTS
DON DURDEN, INC.
11550 I.H. 10 WEST, SUITE 395
SAN ANTONIO, TEXAS
(210) 641-9999
FAX (210) 641-6440
E-MAIL: CECSATX@TXDIRECT.NET

REVISED 1/12/98

98-003