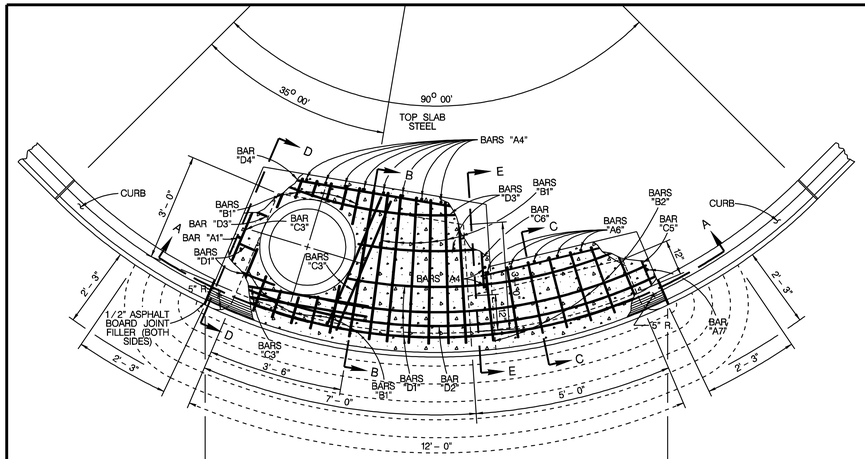

PLAN VIEW–TOP SLAB

SCALE : 1" = 2'

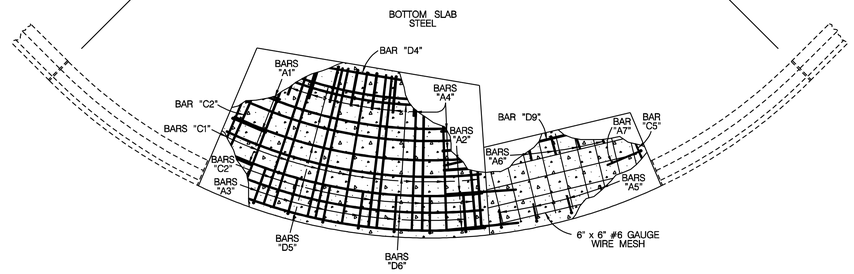

PLAN VIEW–BOTTOM SLAB

SCALE : 1" = 2'

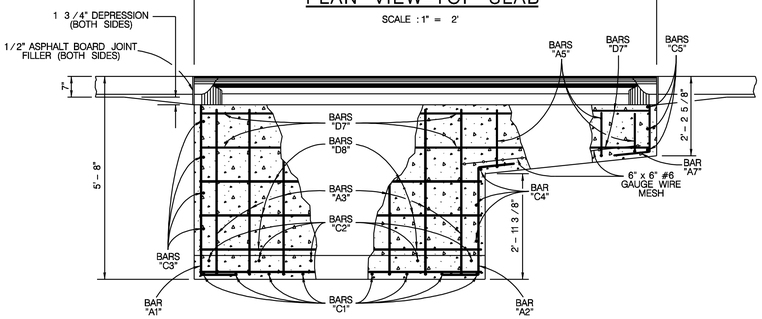

FRONT VIEW

SCALE : 1" = 2'

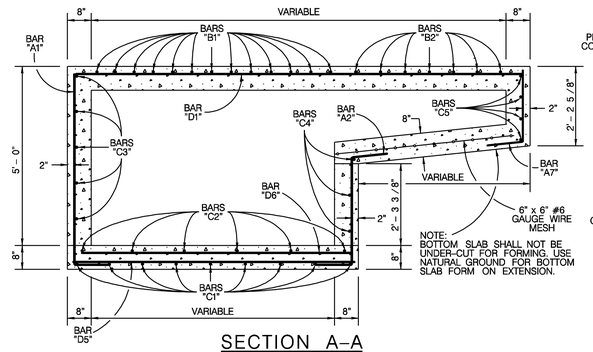

SECTION A–A

SCALE : 1" = 2'

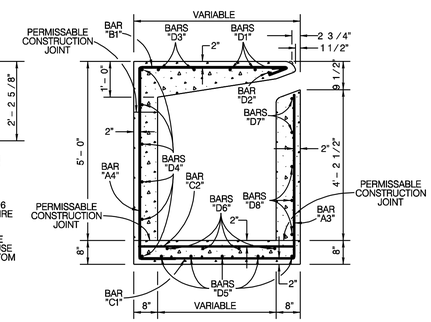

SECTION B–B

SCALE : 1" = 2'

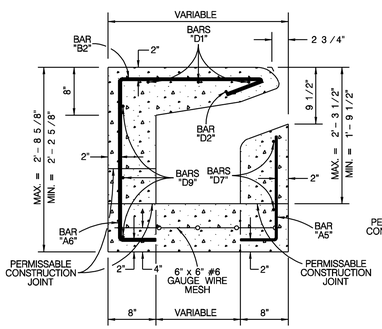

SECTION C–C

SCALE : 1" = 1'

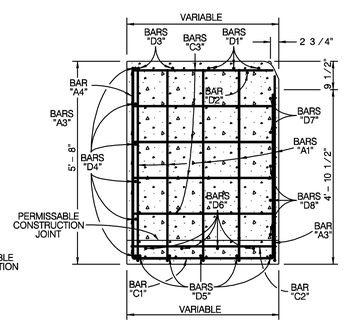

SECTION D–D

SCALE : 1" = 2'

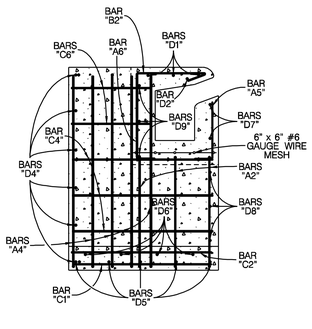

SECTION E–E

SCALE : 1" = 2'

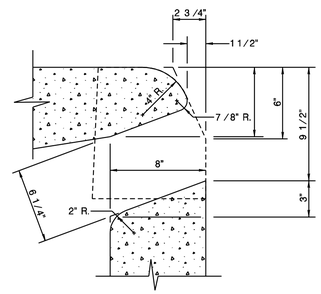

CURB OPENING DETAIL

SCALE : 1" = 6"

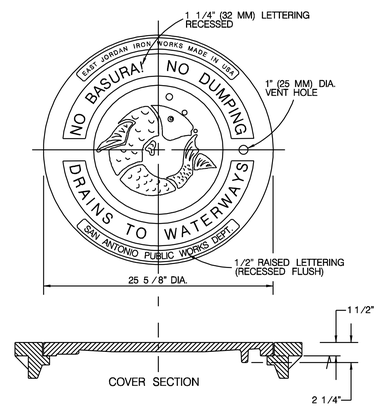

MANHOLE LID & RING DETAIL
(ITEM 409)

SCALE : 1" = 8"

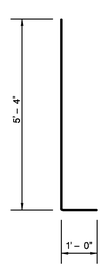

BAR "A1"

SCALE : 1" = 2'

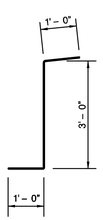

BAR "A2"

SCALE : 1" = 2'

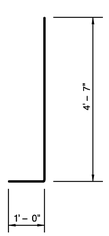

BAR "A3"

SCALE : 1" = 2'

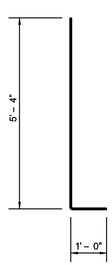

BAR "A4"

SCALE : 1" = 2'

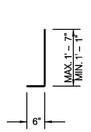

BAR "A5"

SCALE : 1" = 2'

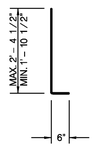

BAR "A6"

SCALE : 1" = 2'

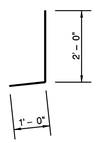

BAR "A7"

SCALE : 1" = 2'

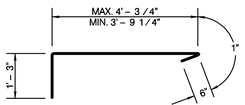

BAR "B1"

SCALE : 1" = 2'

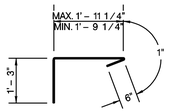

BAR "B2"

SCALE : 1" = 2'

REINFORCING STEEL SCHEDULE

SHAPE	BAR	NO.	SIZE	SPACE	LENGTH	WEIGHT
	A1	5	4	12" C–C	6' – 4"	21
	A2	3	4	12"	5' – 0"	10
	A3	8	4	12"	5' – 7"	30
	A4	16	5	6 1/2"	6' – 4"	106
	A5	5	3	12"	MAX = 2' – 1" MIN = 1' – 7"	3
	A6	7	4	8"	MAX = 2' – 10 1/2" MIN = 2' – 4 1/2"	12
	A7	3	3	12"	3' – 0"	3
	B1	13	5	6 1/2"	MAX = 5' – 10 3/4" MIN = 5' – 7 1/4"	80
	B2	7	4	8"	MAX = 3' – 9 1/4" MIN = 3' – 7 1/4"	17
STRAIGHT	C1	9	4	12"	MAX = 4' – 3 1/2" MIN = 3' – 10"	24
STRAIGHT	C2	6	4	18"	MAX = 4' – 3 1/2" MIN = 3' – 11"	17
STRAIGHT	C3	9	4	12"	3' – 11"	23
STRAIGHT	C4	3	4	12"	3' – 11"	8
STRAIGHT	C5	4	3	7 1/2"	2' – 0"	3
STRAIGHT	C6	2	4	AS SHOWN	2' – 3"	3
	D1	3	4	12"	MAX = 12' – 10" MIN = 11' – 4"	24
	D2	1	4	AS SHOWN	12' – 7"	8
	D3	2	4	12"	MAX = 6' – 7" MIN = 6' – 2"	9
STRAIGHT	D4	6	4	12"	6' – 1"	24
	D5	5	4	12"	MAX = 8' – 0" MIN = 6' – 2"	24
	D6	4	4	12"	MAX = 7' – 9" MIN = 6' – 5"	19
	D7	2	3	12"	12' – 10"	10
	D8	3	4	12"	8' – 0"	16
STRAIGHT	D9	3	3	12"	4' – 5"	5
					TOTAL =	499 LBS.

ESTIMATED QUANTITIES

ITEM	UNIT	NEAT QUANTITY
CLASS "A" CONCRETE	C.Y.	
REINFORCING STEEL	LBS.	499
STORM SEWER CASTINGS	LBS.	260

* THESE FIGURES DO NOT EXCLUDE CONCRETE & STEEL INTERCEPTED BY REINFORCED CONCRETE PIPE AND MANHOLE COVER.

GENERAL NOTES

1. ALL BARS INTERCEPTING REINFORCED CONCRETE PIPE & MANHOLE RING SHALL BE FIELD CUT.
2. CONCRETE FOR STRUCTURE SHALL BE CLASS "A", 3000 P.S.I. IN 28 DAYS.
3. ALL DIMENSIONS RELATING TO REINFORCING STEEL ARE TO CENTER OF BARS.
4. ALL EXPOSED CORNERS SHALL BE CHAMFERED 3/4".
5. CONSTRUCTION JOINT SHOWN AT FLOWLINE MAY BE RAISED A MAXIMUM OF 6" AT THE OPTION OF THE CONTRACTOR. ADJUST LENGTH OF VERTICAL STEEL AS REQUIRED.
6. ALL REINFORCING STEEL SHALL MEET A.S.T.M. SPECIFICATION A–615, GRADE 60.
7. INVERT OF DROP INLET TO BE SHAPED WITH CONCRETE FILL (2500 P.S.I. MINIMUM) TO EFFECT DRAINAGE TO OUTLET PIPE.
8. ALL CONSTRUCTION JOINTS SHALL BE KEYED 3/4" x 3 1/2".
9. PAYMENT FOR ALL EXCAVATION, BACK FILLING, CONCRETE, REINFORCING STEEL, RING & COVER SHALL BE INCLUDED IN THE UNIT COST OF ITEM 403 "STORM SEWER JUNCTION BOXES AND INLETS".

NOTES FOR MANHOLE LID AND RING

1. FOR LID DESIGN OUTSIDE OF CITY OF SAN ANTONIO, DELETE "SAN ANTONI0 PUBLIC WORKS DEPT.".
2. CASTING NUMBER AND MANUFACTURER'S I.D. ON LID AND RING.
3. LOAD BEARING CAPABILITY OF HS–20 MINIMUM.
4. THE LOAD BEARING SURFACES SHALL BE MACHINE GROUND.
5. THE COMBINED WEIGHT OF THE MANHOLE RING AND COVER MUST BE AT LEAST 260 LBS.

JANUARY 2005

STANDARD PLANS
CITY OF SAN ANTONIO, TEXAS
DEPARTMENT OF PUBLIC WORKS

TYPE "D" INLET STANDARDS

DRAWN BY: V. VASQUEZ	DATE	REVISIONS	SCALE: SEE ABOVE
CHECKED BY: NAT HARDY, P.E.			DATE:
			SHEET: OF