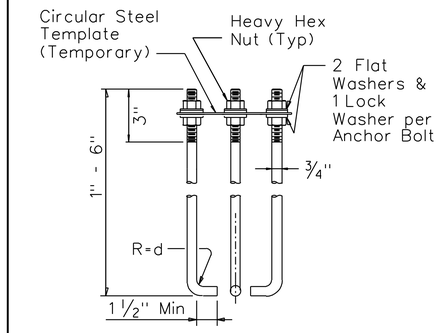

HOOKED ANCHOR

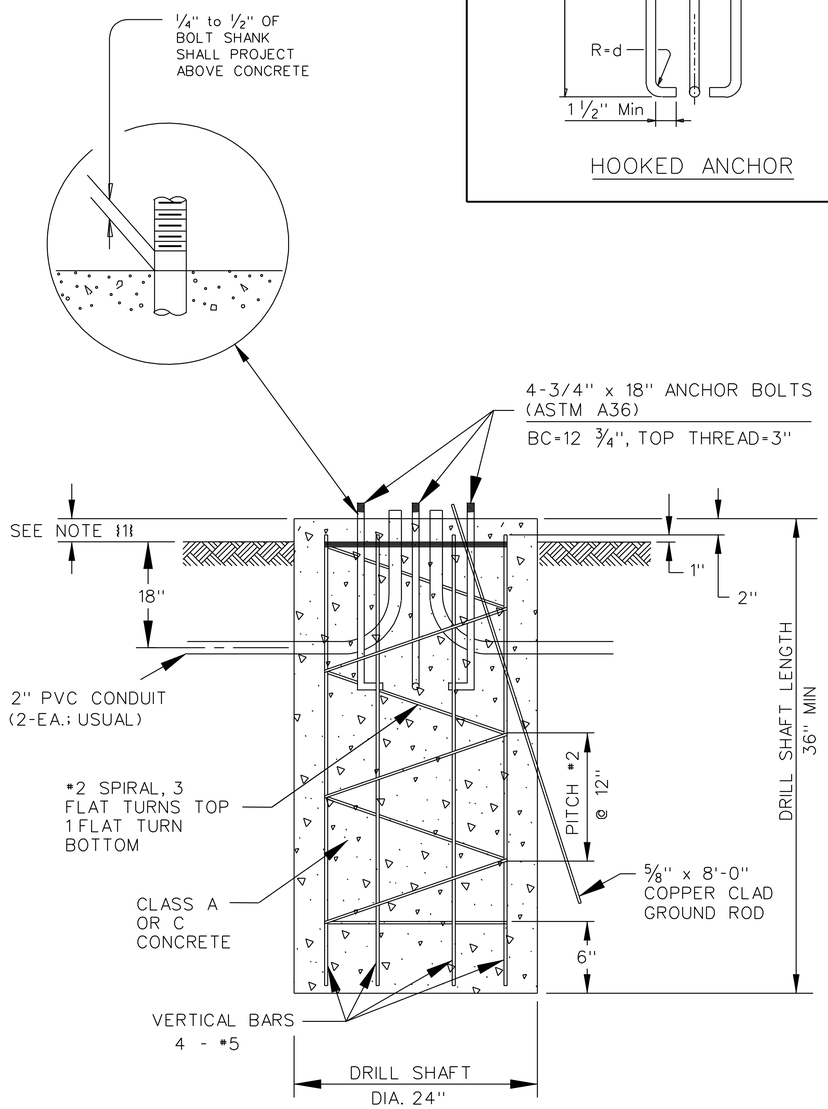

NOTE #1 - 3" UNLESS OTHERWISE DIRECTED BY THE ENGINEER

24" FOUNDATION

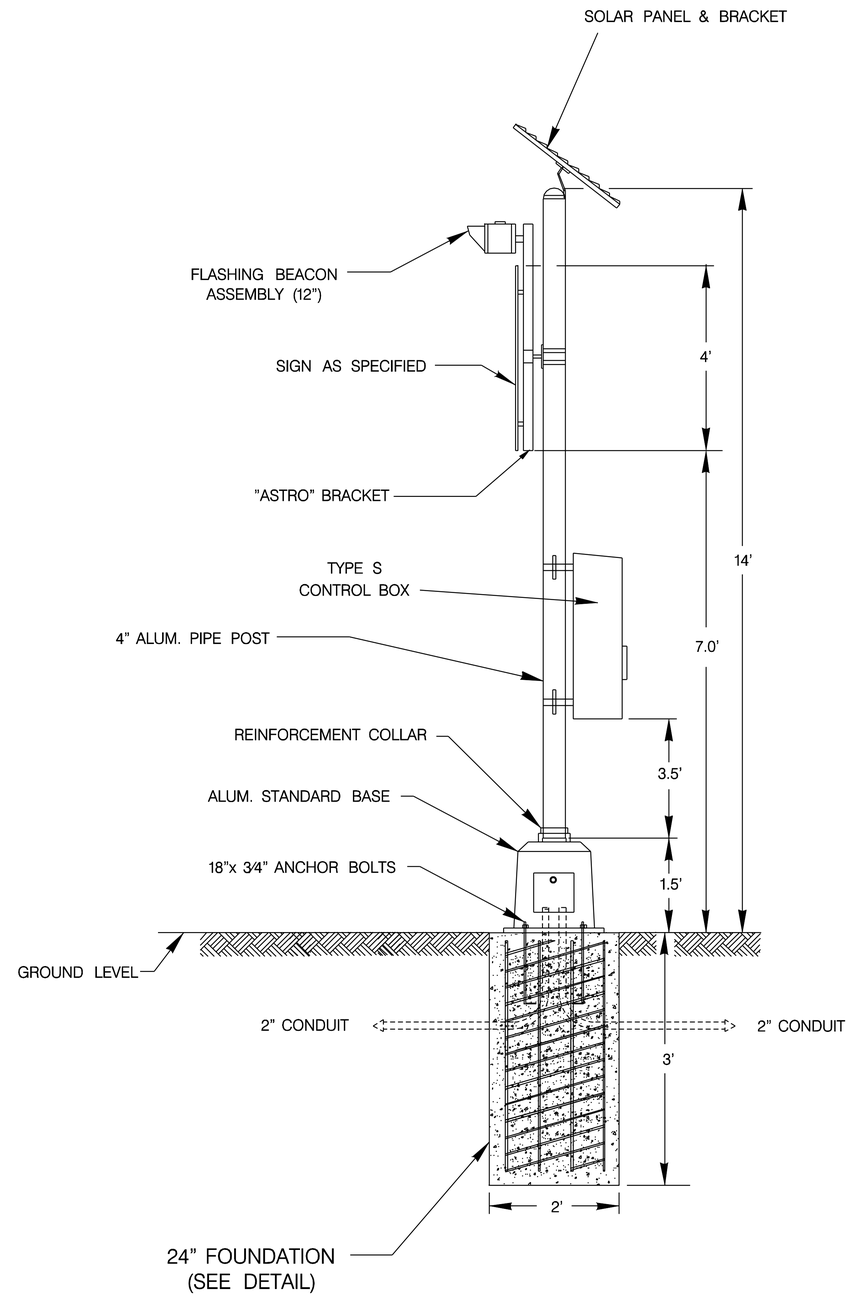

THE ORIGINAL OF THIS DRAWING WAS SIGNED AND AND SEALED BY JOHN D. FRIEBELE, P.E., # 46394 ON 04/8/05 AND IS ON FILE WITH THE TRAFFIC ENGINEERING DIVISION OF THE PUBLIC WORKS DEPARTMENT, CITY OF SAN ANTONIO.

NO.	REVISION	BY:	DATE:

CITY OF SAN ANTONIO
TRAFFIC ENGINEERING DIVISION
DEPARTMENT OF PUBLIC WORKS

TRAFFIC SIGNAL STANDARDS

ADVANCE WARNING BEACON

TE-AWB-05

DESIGNED: JDF	CHECKED: JDF		SHT. NO.
DRAWN: AFG	CHECKED: JDF		
REVISED:	CHECKED:	SCALE: NOT TO SCALE	

FLASHER ASSEMBLY - TYPE S