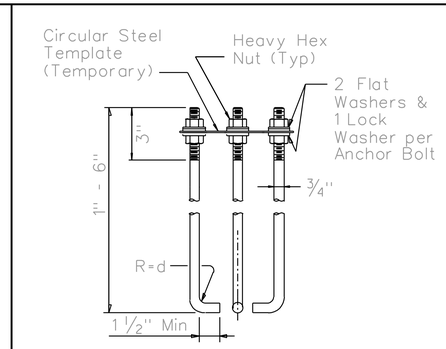

HOOKED ANCHOR

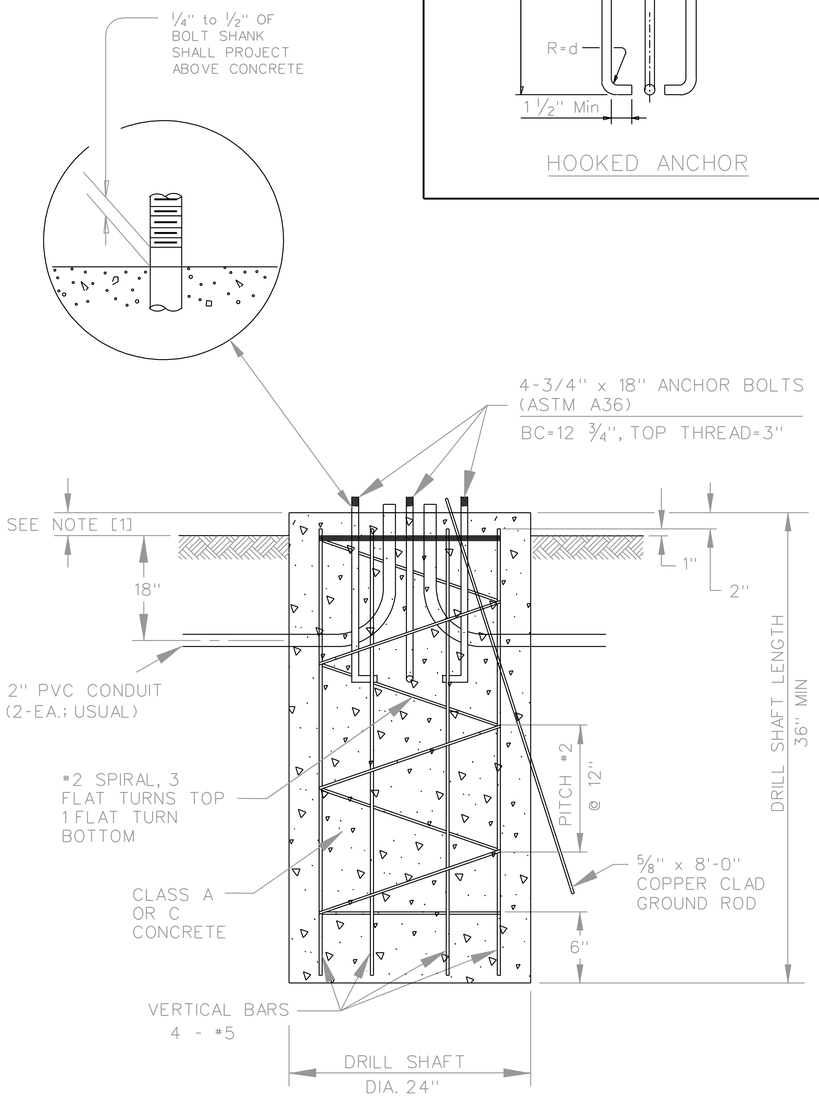

NOTE [1] - 3" UNLESS OTHERWISE DIRECTED BY THE ENGINEER

24" FOUNDATION

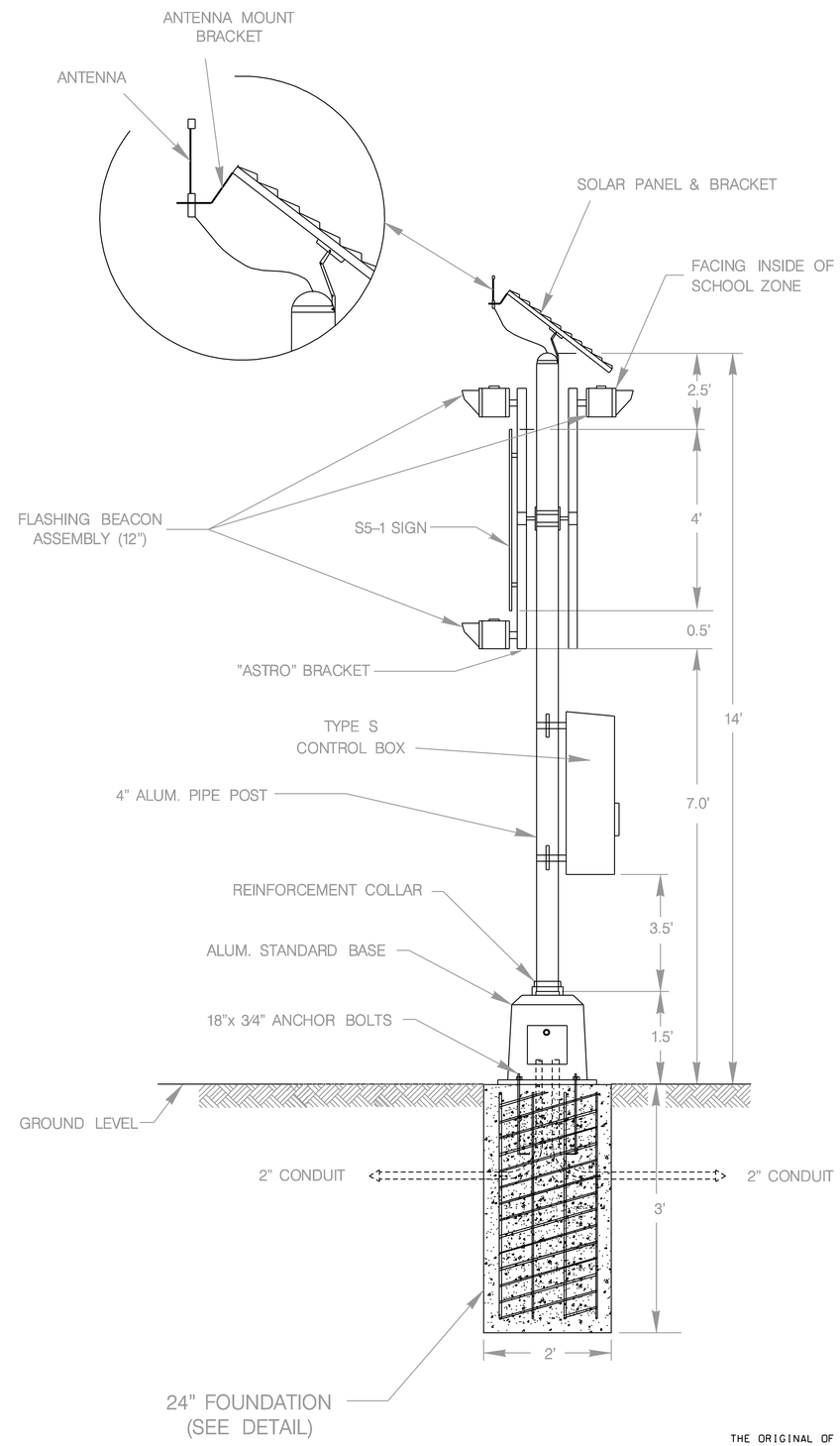

THE ORIGINAL OF THIS DRAWING WAS SIGNED AND SEALED BY JOHN D. FRIEBELE, P.E., # 46394 ON 08/13/03 AND IS ON FILE WITH THE TRAFFIC ENGINEERING DIVISION OF THE PUBLIC WORKS DEPARTMENT, CITY OF SAN ANTONIO.

FLASHER ASSEMBLY - TYPE S

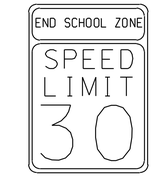

S5-2A (COSA)
24" x 9"

R2-1
24" x 30"

S1-1
36" x 36"
(DIAMOND GRADE FLOURESCENT YELLOW GREEN)

(DIAMOND GRADE FLOURESCENT YELLOW GREEN)

S5-1
24" x 48"
(HIGH INTENSITY WHITE)

W16-17
30" x 18"
(DIAMOND GRADE FLOURESCENT YELLOW GREEN)

W16-9P
36" x 20"
(DIAMOND GRADE FLOURESCENT YELLOW GREEN)

ALL SIGNS SHALL COMPLY WITH STANDARD HIGHWAY SIGNS MANUAL, LATEST EDITION

NO.	REVISION	BY:	DATE:
1	UPDATE SIGNS	JDF	08/12/03
2	ADDED ANTENA w/ BRACKET	JDF	08/12/03
3	CHANGED FOUNDATION	JDF	08/12/03

CITY OF SAN ANTONIO
TRAFFIC ENGINEERING DIVISION
DEPARTMENT OF PUBLIC WORKS

TRAFFIC SIGNAL STANDARDS

SCHOOL FLASHER

TE-SF-03

DESIGNED: JDF	CHECKED: JMC		SHT. NO.
DRAWN: OPT	CHECKED: JDF		
REVISED: AFG	CHECKED: JDF	SCALE: NOT TO SCALE	

DATE: 04/22/97 DETAILS.DGN