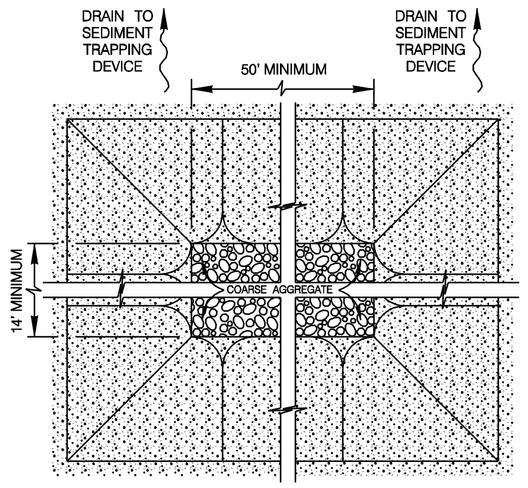

PLAN

SCALE : 1" = 3'

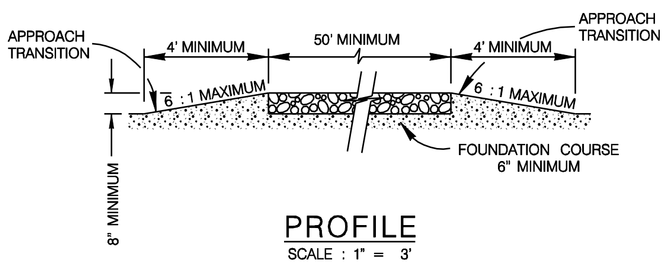

PROFILE

SCALE : 1" = 3'

GENERAL NOTES

1. THE LENGTH OF THE TYPE 1 CONSTRUCTION EXIT SHALL BE AS INDICATED ON THE PLANS, BUT NOT LESS THAN 50'.
2. THE COARSE AGGREGATE SHOULD BE OPEN GRADED WITH A SIZE OF 4" TO 8".
3. THE APPROACH TRANSITIONS SHOULD BE NO STEEPER THAN 6 : 1 AND CONSTRUCTED AS DIRECTED BY THE ENGINEER.
4. THE CONSTRUCTION EXIT FOUNDATION COURSE SHALL BE FLEXIBLE BASE, BITUMINOUS CONCRETE, PORTLAND CEMENT CONCRETE OR OTHER MATERIAL AS APPROVED BY THE ENGINEER.
5. THE CONSTRUCTION EXIT SHALL BE GRADED TO ALLOW DRAINAGE TO A SEDIMENT TRAPPING DEVICE.
6. THE GUIDELINES SHOWN HEREON ARE SUGGESTIONS ONLY AND MAY BE MODIFIED BY THE ENGINEER.

CONSTRUCTION EXIT – TYPE 1

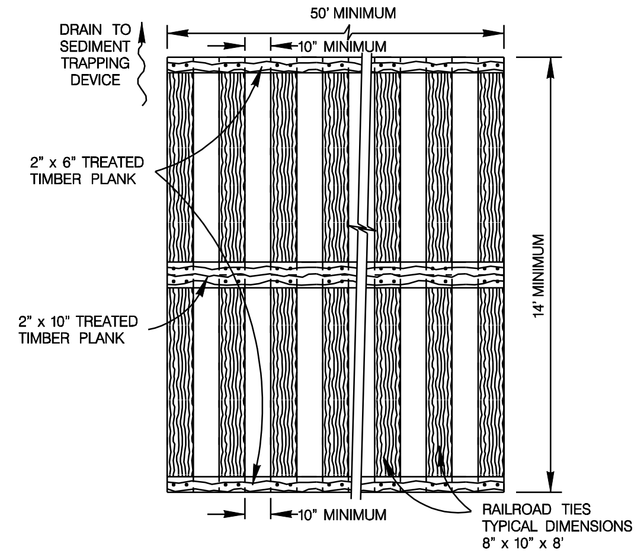

PLAN

SCALE : 1" = 3'

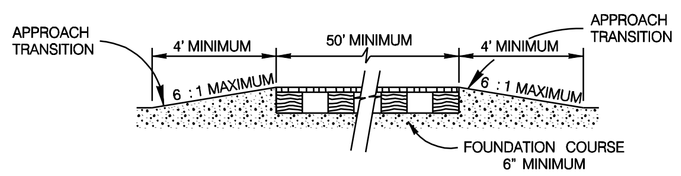

PROFILE

SCALE : 1" = 3'

GENERAL NOTES

1. THE LENGTH OF THE TYPE 2 CONSTRUCTION EXIT SHALL BE AS INDICATED ON THE PLANS, BUT NOT LESS THAN 50'.
2. THE TREATED TIMBER PLANKS SHALL BE ATTACHED TO THE RAILROAD TIES WITH 1/2" x 6" MIN. LAG BOLTS. OTHER FASTENERS MAY BE USED AS APPROVED BY THE ENGINEER.
3. THE TREATED TIMBER PLANKS SHALL BE #2 GRADE MIN., AND SHOULD BE FREE FROM LARGE AND LOOSE KNOTS.
4. THE APPROACH TRANSITIONS SHOULD BE NO STEEPER THAN 6 : 1 AND CONSTRUCTED AS DIRECTED BY THE ENGINEER.
5. THE CONSTRUCTION EXIT FOUNDATION COURSE SHALL BE FLEXIBLE BASE, BITUMINOUS CONCRETE, PORTLAND CEMENT CONCRETE OR OTHER MATERIAL AS APPROVED BY THE ENGINEER.
6. THE CONSTRUCTION EXIT SHOULD BE GRADED TO ALLOW DRAINAGE TO A SEDIMENT TRAPPING DEVICE.
7. THE GUIDELINES SHOWN HEREON ARE SUGGESTIONS ONLY AND MAY BE MODIFIED BY THE ENGINEER.

CONSTRUCTION EXIT – TYPE 2

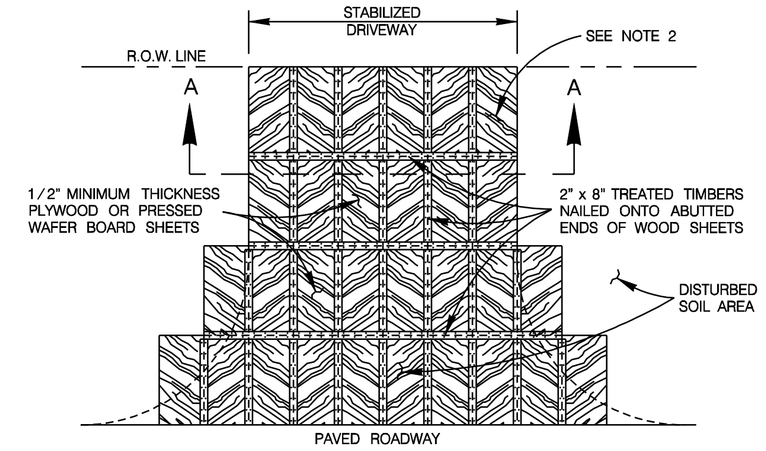

PLAN

SCALE : 1" = 10'

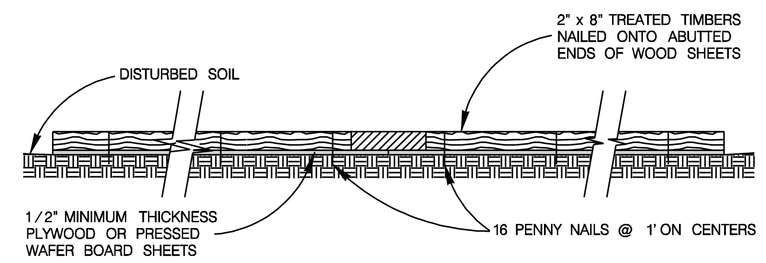

SECTION A–A

SCALE : 1" = 1'

GENERAL NOTES

1. THE LENGTH OF THE TYPE 3 CONSTRUCTION EXIT SHALL BE AS INDICATED ON THE PLANS, OR AS DIRECTED BY THE ENGINEER.
2. THE TYPE 3 CONSTRUCTION EXIT MAY BE CONSTRUCTED FROM OPEN GRADED CRUSHED STONE WITH A SIZE OF 2 TO 4 INCHES SPREAD A MINIMUM OF 4 INCHES THICK TO THE LIMITS SHOWN ON THE PLANS.
3. THE TREATED TIMBER PLANKS SHALL BE #2 GRADE MIN., AND SHOULD BE FREE FROM LARGE AND LOOSE KNOTS.
4. THE GUIDELINES SHOWN HEREON ARE SUGGESTIONS ONLY AND MAY BE MODIFIED BY THE ENGINEER.

CONSTRUCTION EXIT – TYPE 3

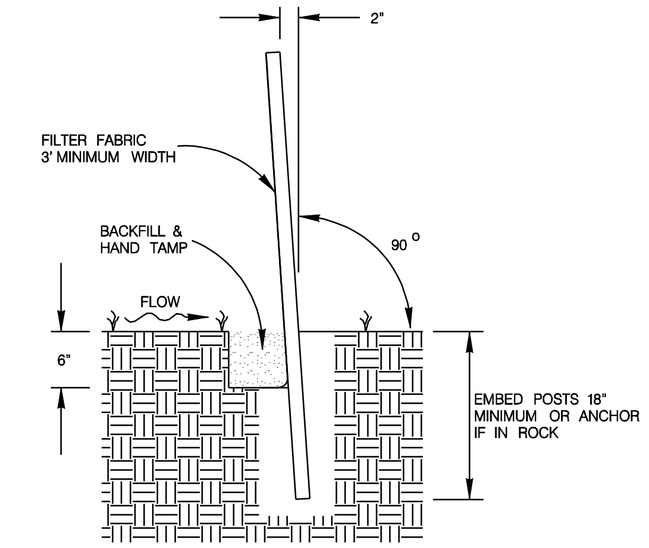

SECTION C–C

SCALE : 1" = 1'

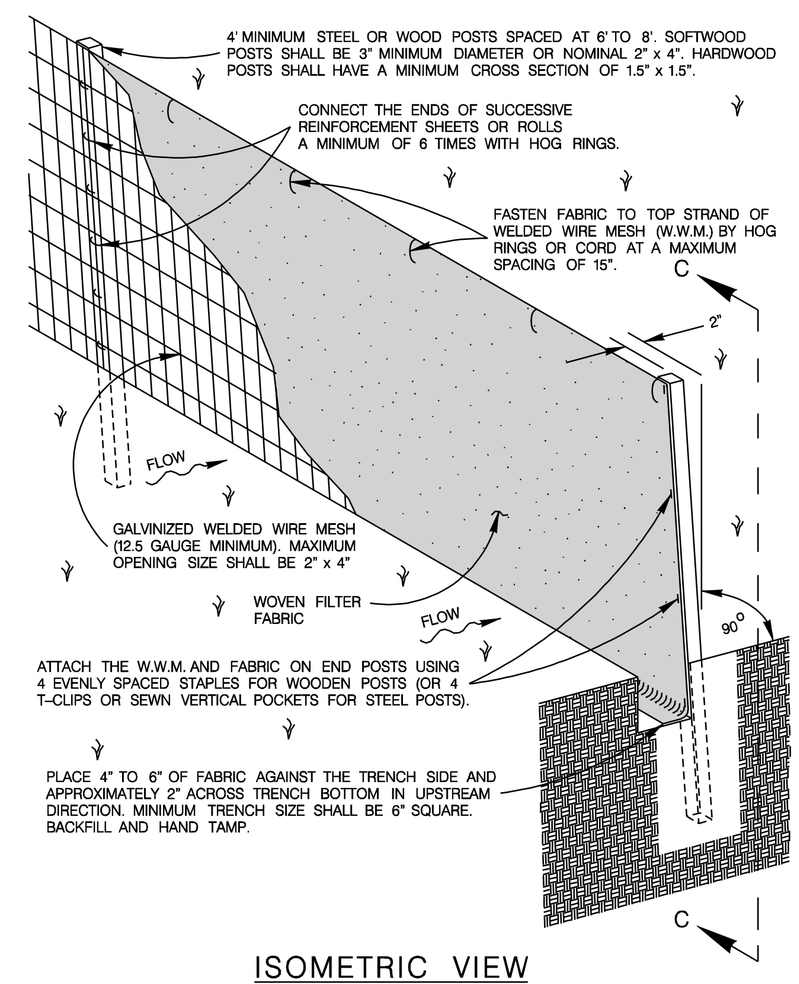

ISOMETRIC VIEW

SCALE : 1" = 1'

SEDIMENT CONTROL FENCE USAGE GUIDELINES

A SEDIMENT CONTROL FENCE MAY BE CONSTRUCTED NEAR THE DOWNSTREAM PERIMETER OF A DISTURBED AREA ALONG A CONTOUR TO INTERCEPT SEDIMENT FROM OVERLAND RUN–OFF. A 2 YEAR STORM FREQUENCY MAY BE USED TO CALCULATE THE FLOW RATE TO BE FILTERED.

SEDIMENT CONTROL FENCE SHOULD BE SIZED TO FILTER A MAXIMUM FLOW THRU RATE OF 100 GPM /FT SQUARED. SEDIMENT CONTROL FENCE IS NOT RECOMMENDED TO CONTROL EROSION FROM A DRAINAGE AREA LARGER THAN 2 ACRES.

GENERAL NOTES

1. THE GUIDELINES SHOWN HEREON ARE SUGGESTIONS ONLY AND MAY BE MODIFIED BY THE ENGINEER.

TEMPORARY SEDIMENT CONTROL FENCE

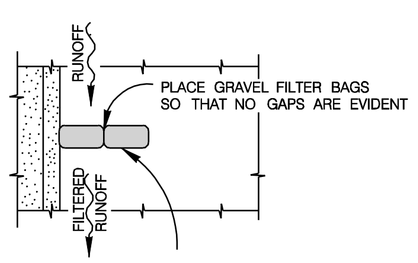

3 /4" GRAVEL CONTAINED IN PERVIOUS BURLAP BAGS OR SYNTHETIC NET BAGS (1/8" MESH) APPROX. 24" LONG, 12" WIDE AND 6" HIGH

PLAN

SCALE : 1" = 5'

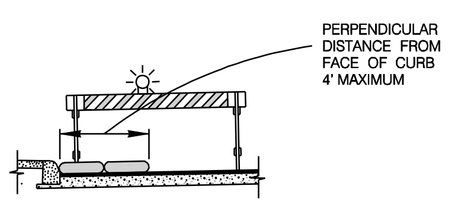

ELEVATION

SCALE : 1" = 5'

NOTE:
STRADDLE GRAVEL FILTER BAGS WITH TYPE 1 BARRICADES MOUNTED WITH TYPE "A" FLASHING WARNING LIGHT. SEE BARRICADE CONSTRUCTION SIGN DETAILS. PLACE FLASHING LIGHTS AWAY FROM GUTTER, FLUSH WITH OUTSIDE EDGE OF BAG CONFIGURATION.

GRAVEL FILTER BAGS

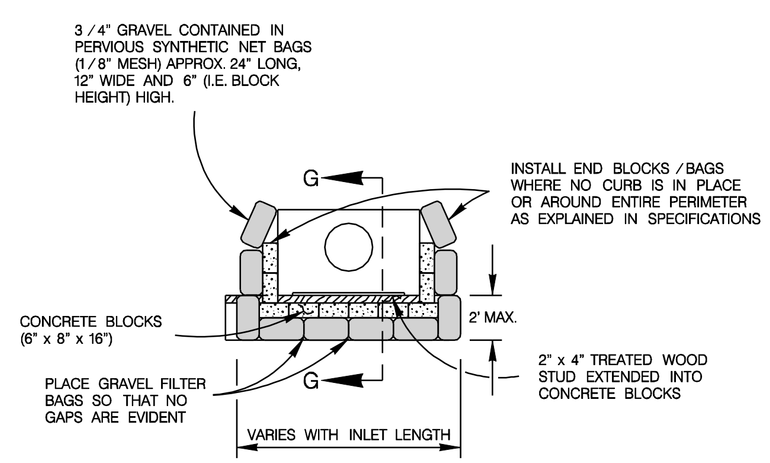

PLAN

SCALE : 1" = 5'

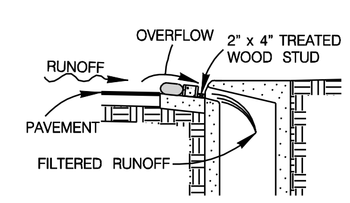

SECTION G–G

SCALE : 1" = 5'

NOTE:
GRAVEL FILTERS CAN BE USED ON PAVEMENT OR BARE GROUND.

CURB INLET GRAVEL FILTER

JANUARY 2005

STANDARD PLANS
CITY OF SAN ANTONIO, TEXAS
DEPARTMENT OF PUBLIC WORKS

TEMPORARY EROSION, SEDIMENT & WATER POLLUTION CONTROL MEASURES, PART 1

DRAWN BY: V. VASQUEZ	DATE	REVISIONS	SCALE: SEE ABOVE
CHECKED BY: NAT HARDY, P.E.			DATE:
			SHEET: OF