Visual Representation of Eight (8) Cubic Yards

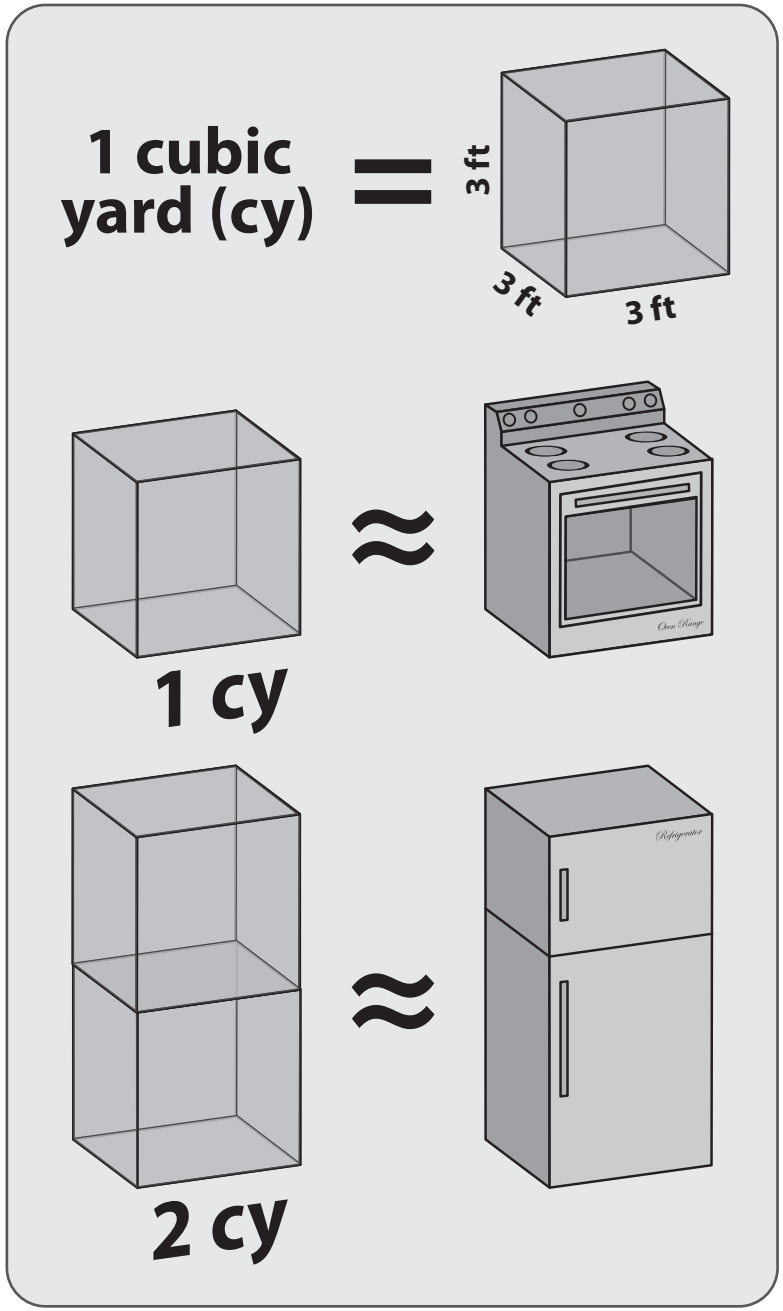

8 cubic yards

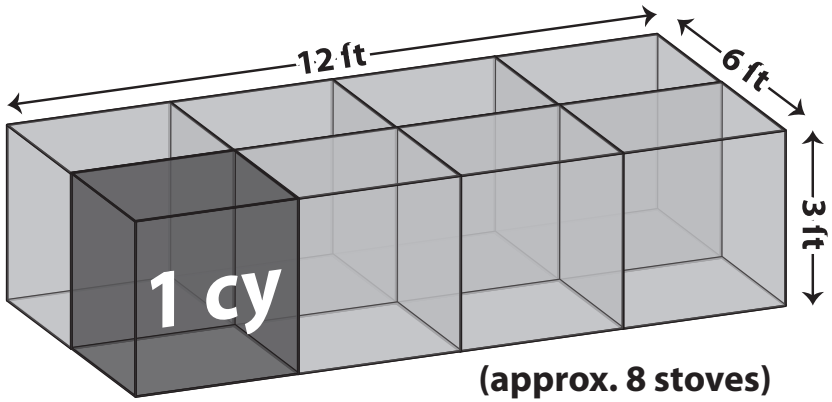

(approx. 8 stoves)

or

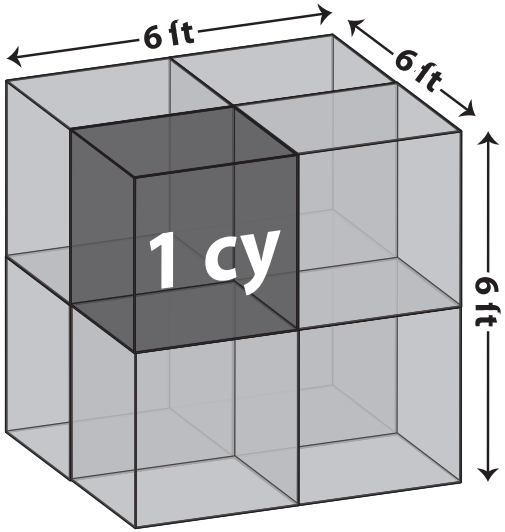

(approx. 4 refrigerators)

City of San Antonio
Solid Waste Management Department